Spare parts list

Big bale wrapper

Taarup 7664

with options

UH124250

Theo van der Perk Mechanisatiebedrijf bv

Parkweg 95 4153 XL Beesd (NL)

www.Perkbv.com www.Taarup.info

Specialist & Dealer van:

taarup

Kverneland

waar landbouw ondernemen is

JOHN DEERE

Vicon

CLAAS

voor al uw onderdelen **www.1001parts.nl**

Spare parts list
Taarup - Big bale wrapper

Reservedelsliste
Taarup - Storballepakker

Valid from serial no./Valid from serie nr.
7660012-->

Important
All references to right an left hand side apply to the view of the machine when standing behind and facing the direction of travel.

Please note the following when ordering spare parts:
It should always be referred to serial number. This is found on the machine's identifiation plate.
The spare part's catalogue number and description should be used.
The reference number is used only to help identifying the spare part on the illustration.
The arrow on the illustration shows the direction of travel.

Viktig
Alle referanser til retningene høyre og venstre henviser til delens posisjon når en står bak maskinen og ser i fartsretningen.

Ved bestilling av deler må en merke seg følgende:
Oppgi alltid maskinens serie- og produksjonsnummer. Disse numrene finner en på identifikasjonsskiltet på maskinen.

kverneland group

Table of content
Innholdsfortegnelse

		Fig.	Page/Side
Drawbar	Drag	1	2
Frame & Wheels	Ramme & Hjul	2	6
Roller arms	Rullarmer	3	10
Roller drive	Drivverk ruller	4	12
Satellitemast	Tårn for satellitt	5	16
Pre-stretcher	Forstrekker	6	20
Drive unit	Drivenhet	7	24
Film pre-stretcher and safety arm	Forstrekker og sikringsarmer	8	26
Applicutter	Filmkutter	9	28
Electrical controller	Elektrisk styring	10	32
Hydraulics 1	Hydraulikk 1	11	34
Hydraulics 2	Hydraulikk 2	12	38
Light equipment	Lysutstyr	13	40

Numerical parts index **Numerisk deleregister** **42**

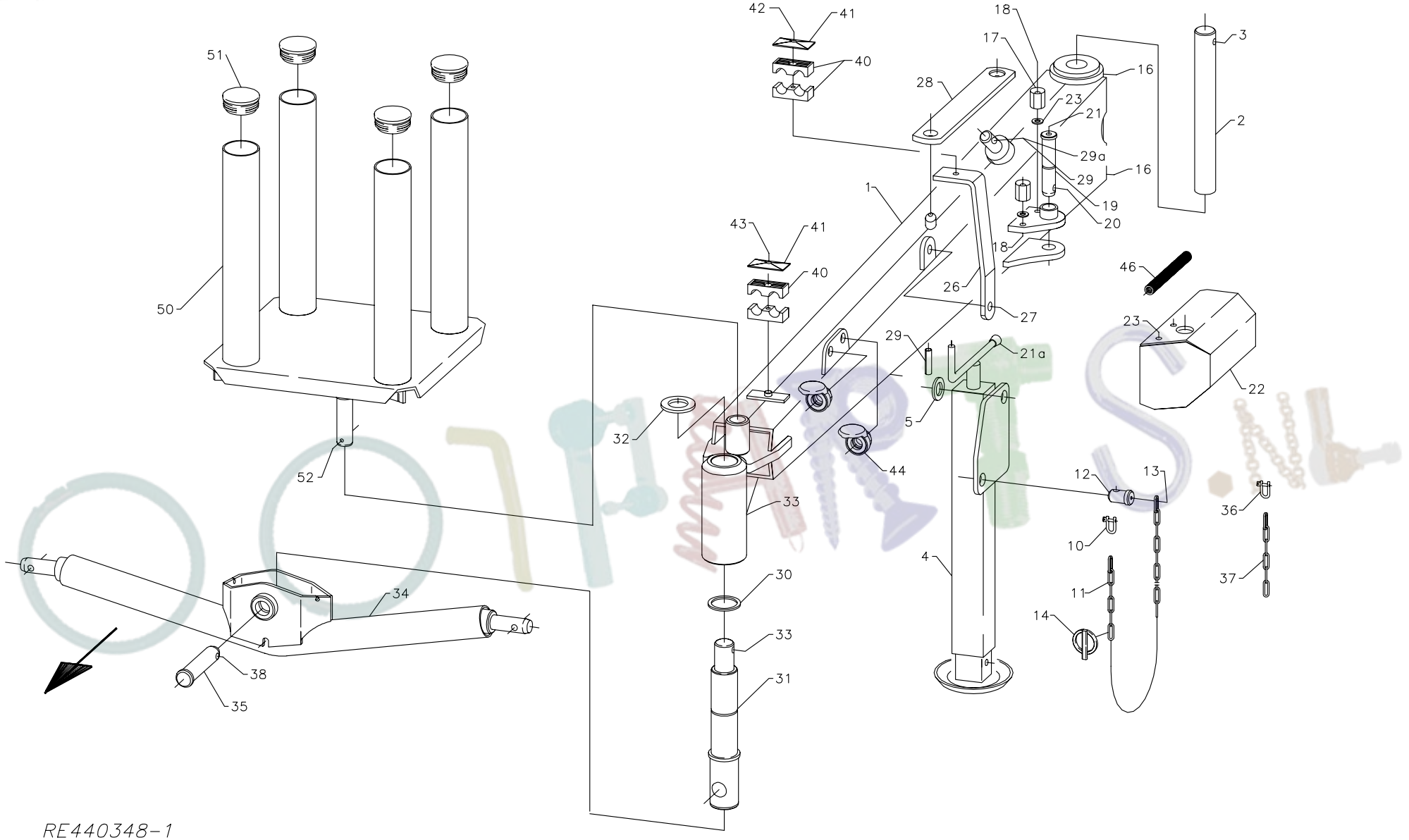

Fig: 1

Page issue: / Sideutgave:	01	Implement: / Redskap:	7664	Big bale wrapper / Storballepakker
Date: / Dato:	1102	Unit: / Enhet:	Drawbar / Drag	Fig. no: / Fig. nr: 1

No. / Ref.	Part no. / Delenr.	Qty. / Ant.	Description	Beskrivelse	Note / Anm.
1-37	UH440348		DRAWBAR	DRAG	
1	UH440350	1	DRAWBAR	DRAG SV.	
2	UH440368	1	AXLE	AKSEL Ø40X306-Ø12/20	
3	UH866660	1	TENSION PIN 12X60	SPENNHYLSE 12X60	
4	UH412615	1	PARKING LEG	PARKERINGSFOT SV.	
5	UH860175	1	WASHER Ø25.3-Ø44X4	UNDERLAGSSKIVE Ø25.3-Ø44X4	
6	UH866645	1	LOCK PIN 12X45	SPENNHYLSE 12X45	
	-				
10-14	UH412620		CHAIN ASSY	KJETTING KOMPL.	
10	UH412631	1	SHACKLE	SJAKKEL Ø5	
11	UH215888	1	CHAIN Ø3-26X416	KJETTING Ø3-26X416	
12	UH412611	1	BOLT W/HEAD	BOLT M/HODE Ø24X21	
13	UH813314	1	HEX. BOLT M6X14-8.8 GALV.	SEKSKANTSKRUE M6X14-8.8 ELZN	
13	UH860156	1	WASHER Ø6.6-Ø12X1.5	BRIKKE Ø6.6-Ø12X1.5 ELZN	
14	UH867061	1	RING PIN 12 (7/16") GALV.	RINGPINNE Ø12 (7/16") ELZN	
	-				
16	UH873540	2	GREASE NIPPLE M6 STRAIGHT	SMØRENIPPEL M6 RETT	
17	UH256571	2	NUT	MUTTER	
18	UH813520	2	HEX. BOLT M10X20-8.8 GALV.	SEKSKANTSKRUE M10X20-8.8 ELZN	
19	UH411320	1	BOLT M/HODE Ø25X93	BOLT M/HODE Ø25X93	
20	UH867061	1	RING PIN 12 (7/16") GALV.	RINGPINNE Ø12 (7/16") ELZN	
21	UH873545	1	GREASE NIPPLE M8X1.25	SMØRENIPPEL M8X1.25 RETT	
21a	UH410493	2	SPACER Ø12, PARKING LEG	DEKKHYLSE Ø12	
22	UH440366	1	GUARD	SKJERM SV.	
23	UH860160	2	WASHER Ø10.5-Ø21X2	BRIKKE Ø10.5-Ø21X2 ELZN	
23	UH813520	2	HEX. BOLT M10X20-8.8 GALV.	SEKSKANTSKRUE M10X20-8.8 ELZN	
26	UH440365	1	BRACKET	FESTEVINKEL	
27	UH813840	1	HEX. BOLT M16X40-8.8 GALV.	SEKSKANTSKRUE M16X40-8.8 ELZN	
27	UH860166	2	WASHER Ø17-Ø30X3	BRIKKE Ø17-Ø30X3 ELZN	
27	UH852166	1	NUT M16 GALV	NYLOCKMUTTER M16 ELZN.	
28	UH440369	1	STAY	STAG	
29	UH866645	1	LOCK PIN 12X45	SPENNHYLSE 12X45	
29a	UH873540	1	GREASE NIPPLE M6 STRAIGHT	SMØRENIPPEL M6 RETT	
	-				
30-35	UH440380		CROSS BAR ASSY	TVERRBOM KOMPL.	
30	UH868610	1	RING 50X62X3	STØTTERING 50X62X3	
31	UH440373	1	BOLT	BOLT	
32	UH440374	1	WASHER	BRIKKE Ø38-Ø65X5	
33	UH866660	1	TENSION PIN 12X60	SPENNHYLSE 12X60	
34	UH440376	1	CROSS BAR	TVERRBOM SV.	
35	UH410630	1	PIN Ø29.8-127	BOLT M/HODE Ø29.8-127	
	-				
36-38	UH440435		CHAIN ASSY	KJETTING KOMPL.	
36	UH412631	1	SHACKLE	SJAKKEL Ø5	
37	UH223075	1	CHAIN Ø3-26X156	KJETTING Ø3-26X156	
38	UH867061	1	RING PIN 12 (7/16") GALV.	RINGPINNE Ø12 (7/16") ELZN	

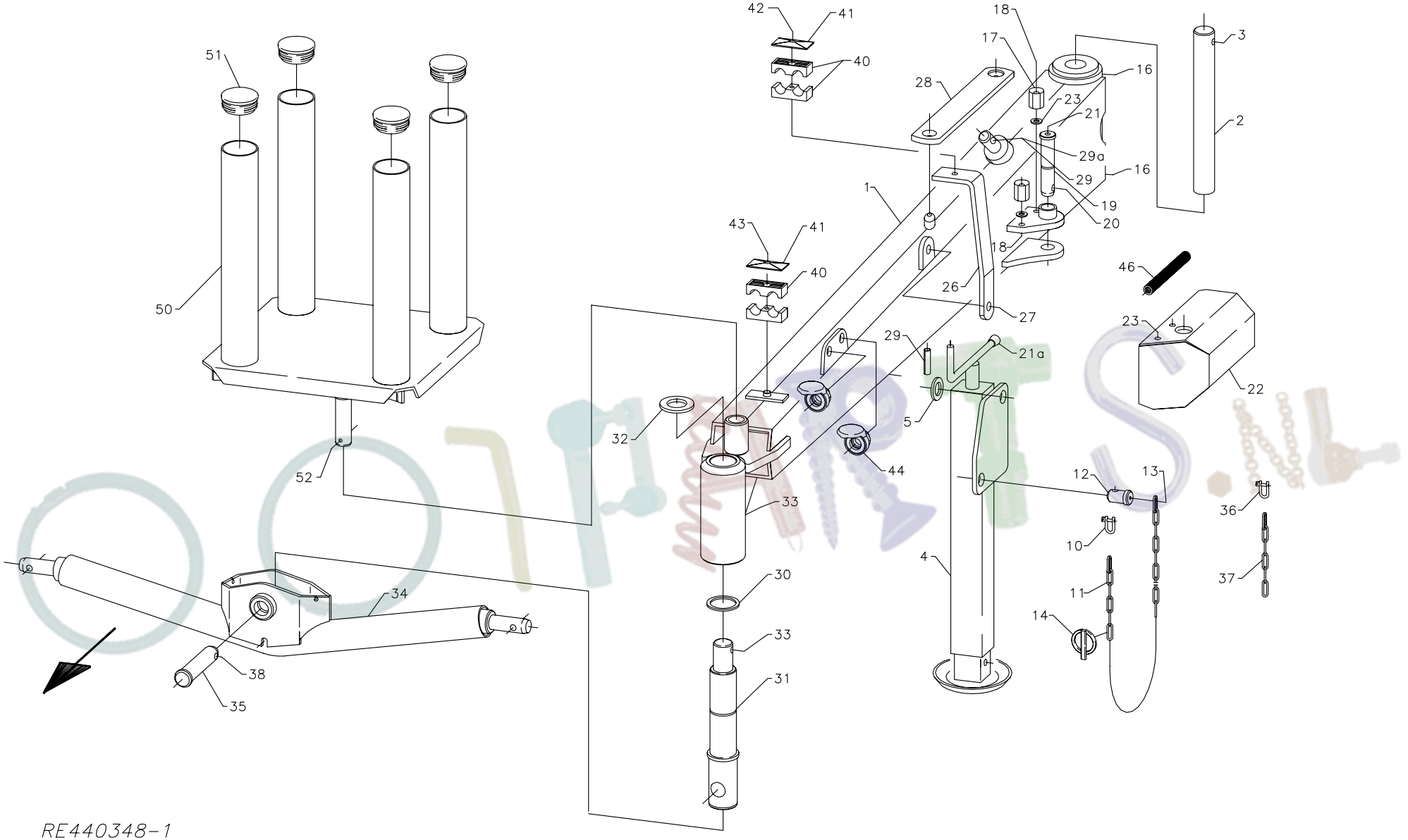

Fig: 1

Page issue: / Sideutgave:	01	Implement: / Redskap:	7664	Big bale wrapper / Storballepakker	
Date: / Dato:	1102	Unit: / Enhet:	Drawbar / Drag		Fig. no: / Fig. nr: 1

No. / Ref.	Part no. / Delenr.	Qty. / Ant.	Description	Beskrivelse	Note / Anm.
	-				
40	UH300877	4	TUBE CLAMP HALF Ø22 DOUBLE	RØRKLAMMERHALVDEL Ø22 DOBBEL	
41	UH300886	2	PLATE 20-25	TOPPLATE 20-25 DOBBEL	
42	UH813470	1	HEX. BOLT M8X70-8.8 GALV.	SEKSKANTSKRUE M8X70-8.8 ELZN	
42	UH852158	1	NYLOCK NUT M8 GALV.	NYLOCKMUTTER M8 ELZN.	
43	UH813445	1	HEX. BOLT M8X45-8.8 GALV.	SEKSKANTSKRUE M8X45-8.8 ELZN	
44	UH217676	2	COVER	SLANGEPARKERINGSLOKK	
	-				
46	UH441235	2	FLEXIBLE TUBING L=2600	FLEKSISLANGE INNV.Ø12.8 L=2600	
	-				
50-52	UH440789		FILM ROLLER MAGAZINE ASSY	FILMHOLDER KOMPL.	OPTION
50	UH440790	1	FILM ROLLER MAGAZINE	FILMHOLDER SV.	
51	UH911270	4	PLUG Ø70	ENDEPLUGG Ø70	
52	UH867056	1	RING PIN 6 GALV	RINGPINNE Ø6 ELZN	

www.TOOLPARTS.nl

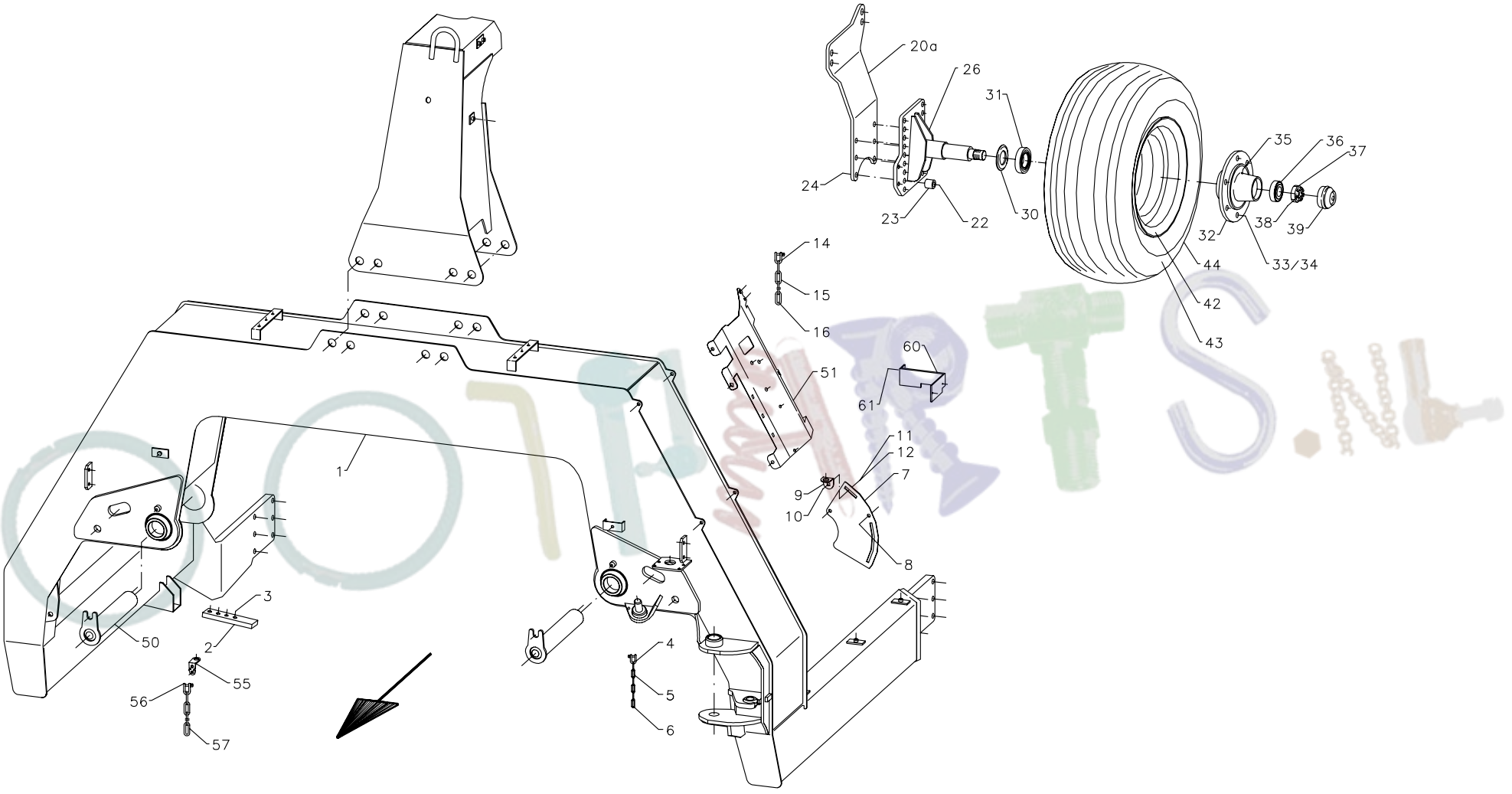
20a
26
31
35
36
37
24
23
22
30
32
38
39
44
33/34
42
43
14
15
16
60
61
51
11
12
7
9
10
8
1
3
50
2
55
56
57
4
5
6
RE440535-1

Fig: 2

Page issue: / Sideutgave:	01	Implement: / Redskap:	7664	Big bale wrapper / Storballepakker
Date: / Dato:	1102	Unit: / Enhet:	Frame and wheels / Ramme og hjul	Fig. no: / Fig. nr: 2

No. / Ref.	Part no. / Delenr.	Qty. / Ant.	Description	Beskrivelse	Note / Anm.
	UH440535		FRAME	RAMME SAMLENR.	
	-				
1	UH441201	1	FRAME	RAMME SV.	
2	UH440418	2	ADJUSTING PLATE	STILLSTANG	
3	UH813640	4	HEX. BOLT M12X40-8.8 GALV	SEKSKANTSKRUE M12X40-8.8 ELZN	
3	UH860163	4	WASHER Ø13-Ø24X2.5	BRIKKE Ø13-Ø24X2.5 ELZN	
3	UH852162	4	NYLOCK NUT M12 GALV	NYLOCKMUTTER M12 ELZN.	
	-				
4-6	UH440435		CHAIN ASSY	KJETTING KOMPL.	
4	UH412631	1	SHACKLE	SJAKKEL Ø5	
5	UH223075	1	CHAIN Ø3-26X156	KJETTING Ø3-26X156	
6	UH867061	1	RING PIN 12 (7/16") GALV.	RINGPINNE Ø12 (7/16") ELZN	
7	UH440460	1	CONNECTION PLATE	FESTEPLATE	
8	UH813520	2	HEX. BOLT M10X20-8.8 GALV.	SEKSKANTSKRUE M10X20-8.8 ELZN	
8	UH860160	2	WASHER Ø10.5-Ø21X2	BRIKKE Ø10.5-Ø21X2 ELZN	
9	UH441101	2	BRACKET	FESTE	
10	UH821416	2	CARRIAGE BOLT M8X16-4.6 GALV.	LÅSESKRUE M8X16-4.6 ELZN.	
10	UH860158	2	WASHER Ø8.4-Ø17X1.6	BRIKKE Ø8.4-Ø17X1.6 ELZN	
	-				
14-16	UH440397		LOCK CHAIN TRANSPORT	TRANSPORTSIKRING	
14	UH440398	1	SHACKLE	SJAKKEL Ø6	
15	UH440399	1	CHAIN	KJETTING Ø6-38X950 M SLANGE	
16	UH867061	1	RING PIN 12 (7/16") GALV.	RINGPINNE Ø12 (7/16") ELZN	
	-				
20a-39	UH440280	1	HUB ASSY LH	HJULNAV SAMLENR. VENSTRE	
20b-39	UH440281	1	HUB ASSY RH	HJULNAV SAMLENR. HØYRE	
20a	UH440692	1	PLATE APPLICUTTER LEFT	FESTEPLATE FILMAUTOMATIKK V.	
22	UH813900	6	HEX. BOLT M16X100-8.8 GALV.	SEKSKANTSKRUE M16X100-8.8 ELZN	
23	UH410958	6	COLLAR 17-30X26	HYLSE Ø17-Ø30X26	
24	UH860166	6	WASHER Ø17-Ø30X3	BRIKKE Ø17-Ø30X3 ELZN	
24	UH852166	6	NUT M16 GALV	NYLOCKMUTTER M16 ELZN.	
	-				
26-39	UH440289		HUB ASSY	HJULNAV KOMPL.	
26	UH440294	2	SHAFT	AKSEL SV.	
30-39	UH401019		HUB ASSY	NAV KOMPLETT .	
31	UH401021	2	INNER BEARING F.A.D. SKF 30210	LAGER INDRE F.A.D. SKF 30210	
32	UH401020	2	HUB	NAVHUS F.A.D.	
33	UH401026	12	WHEEL BOLT M18X1,5X49	RILLEBOLT 18X1.5X49	
34	UH401027	12	WHEEL NUT F.A.D. M18X1.5	HJULMUTTER M18X1.5 M.R16KULE	
35	UH873540	2	GREASE NIPPLE M6 STRAIGHT	SMØRENIPPEL M6 RETT	
36	UH401022	2	OUTER BEARING F.A.D. SKF 30207	LAGER YTRE F.A.D. SKF 30207	
37	UH401024	2	NUT M33X2	KRONEMUTTER F.A.D. M33X2	
38	UH401043	2	SPLIT PIN 5X50 (USE 865297)	SPLINT 5X50MM (BRUK 865297)	
39	UH401025	2	HUB CUP	NAVKAPSEL Ø72	
	-				
42-44	UH401132		WHEEL 11.5/80-15,3 8	HJUL 11.5/80-15,3 8 LAG	

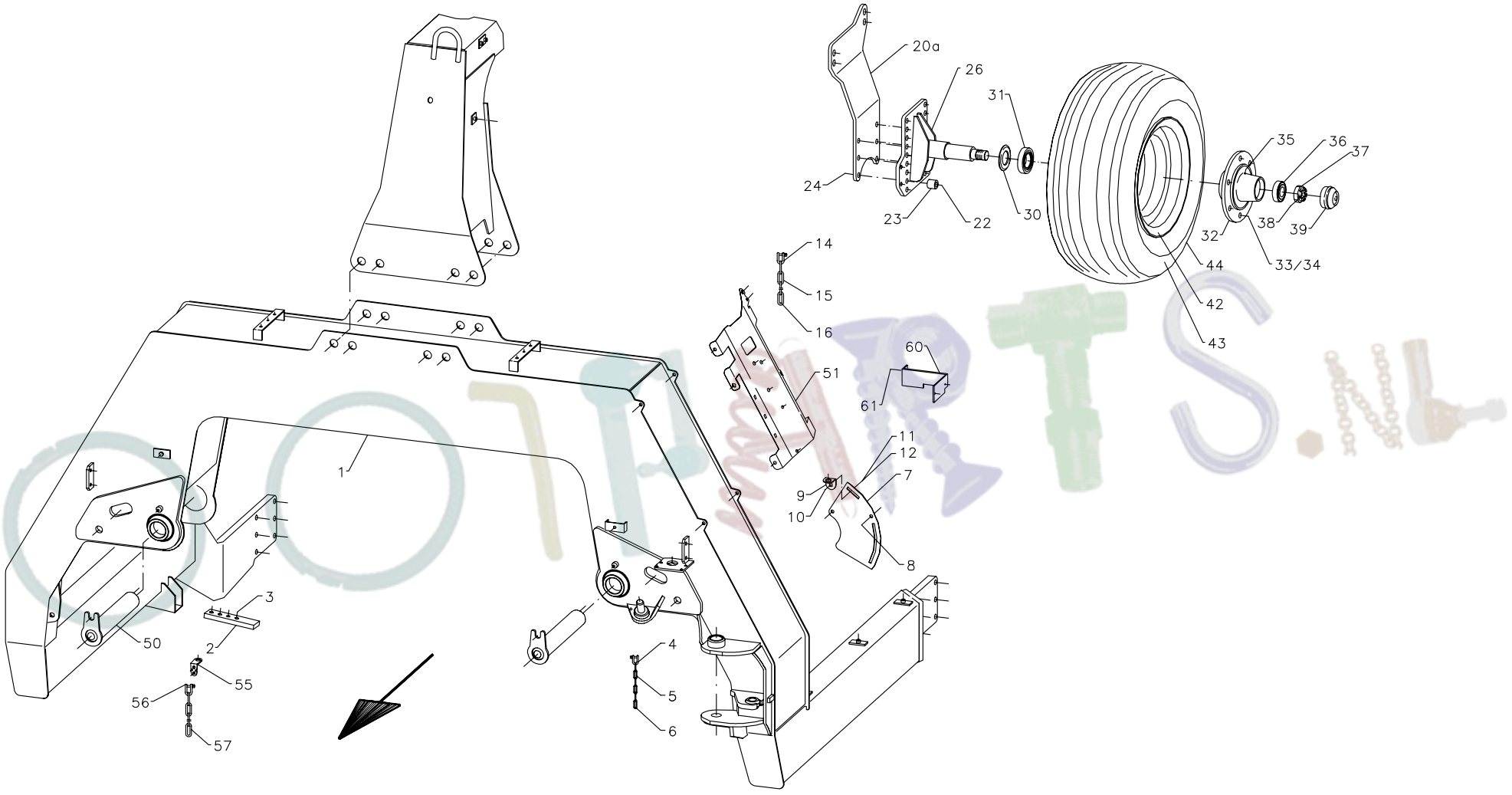

RE440535-1

Fig: 2

Page issue: / Sideutgave:	01	Implement: / Redskap:	7664	Big bale wrapper / Storballepakker	
Date: / Dato:	1102	Unit: / Enhet:	Frame and wheels / Ramme og hjul		Fig. no: / Fig. nr: 2

No. / Ref.	Part no. / Delenr.	Qty. / Ant.	Description	Beskrivelse	Note / Anm.
42	UH401162	2	RIM 11.5/80-15.3	FELG 9.00-15.3" SØLVGRÅ	
43	UH401152	2	TUBE 11.5/80-15.3, 8	SLANGE 11.5/80-15.3, 8	
44	UH401142	2	TYRE 11.5/80-15.3, 8	DEKK 11.5/80-15.3,8	
	-				
50	UH440285	2	SHAFT	AKSEL SV.	
	-				
51	UH440867	1	PLATE	FESTEPLATE	
52	UH813506	1	HEX. BOLT M8X160-8.8 ELZN	SEKSKANTSKRUE M8X160-8.8 ELZN	
52	UH860158	6	WASHER Ø8.4-Ø17X1.6	BRIKKE Ø8.4-Ø17X1.6 ELZN	
52	UH852158	3	NYLOCK NUT M8 GALV.	NYLOCKMUTTER M8 ELZN.	
	-				
55-57	UH440737		TUBE	RØR	
55	UH441018	1	BRACKET	FESTEBRAKETT LEDNING	
56	UH412631	1	SHACKLE	SJAKKEL Ø5	
57	UH411722	1	CHAIN Ø3.5-18X400	KJETTING Ø4-19X513	
	-				
60	UH441106	1	BRACKET	FESTE	
61	UH821325	2	CARRIAGE BOLT M6X25-4.6 GALV.	LÅSESKRUE M6X25-4.6 ELZN.	
61	UH860156	2	WASHER Ø6.6-Ø12X1.5	BRIKKE Ø6.6-Ø12X1.5 ELZN	
61	UH852156	2	NYLOCK NUT M6 GALV.	NYLOCKMUTTER M6 ELZN.	

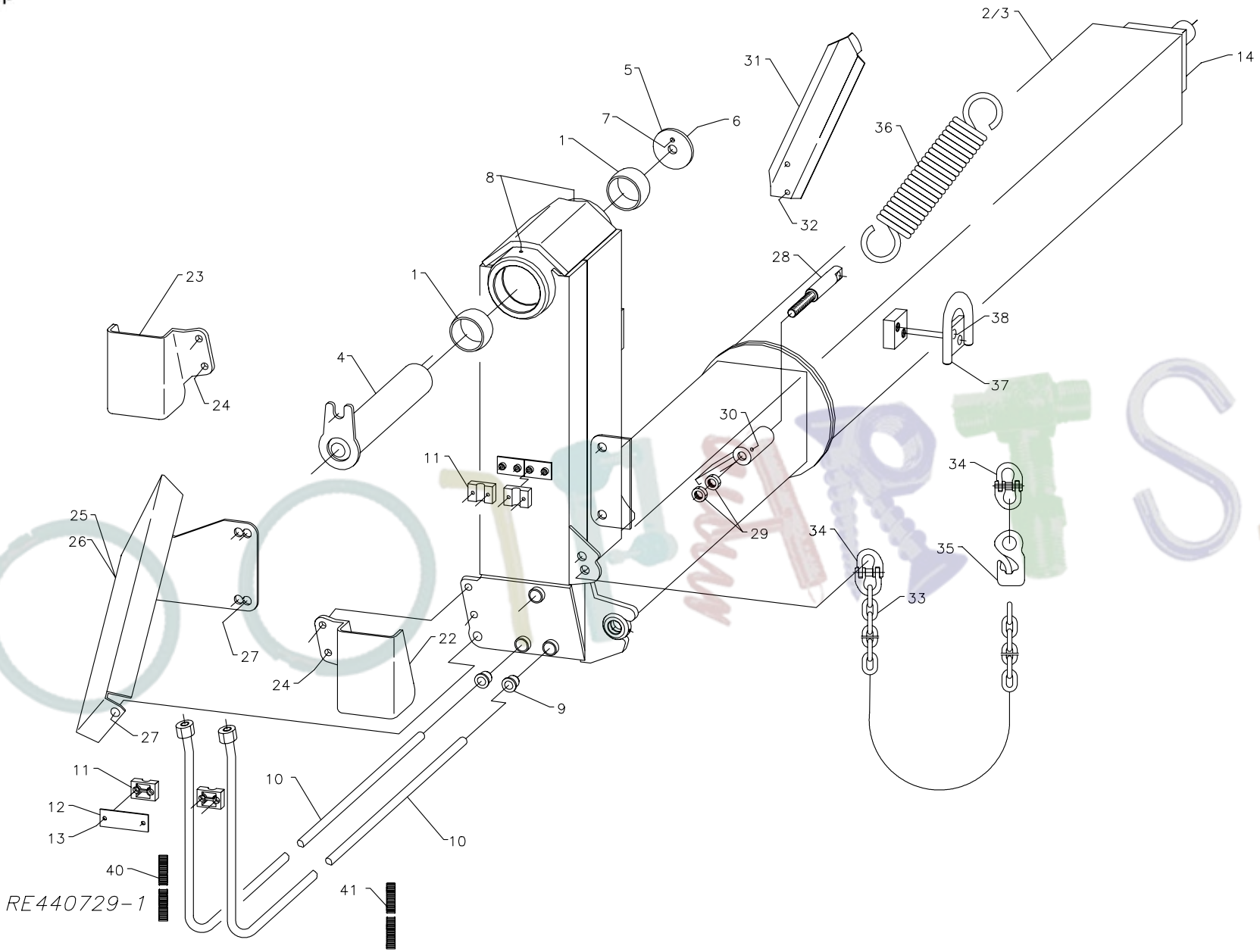
2/3
14
31
5
7
6
1
36
8
32
28
23
1
38
4
37
24
30
11
34
25
29
34
26
35
33
22
27
24
9
27
11
10
12
13
10
40
41
RE440729-1

Fig: 3

Page issue: / Sideutgave:	01	Implement: / Redskap:	7664	Big bale wrapper / Storballepakker
Date: / Dato:	1102	Unit: / Enhet:	Roller arms / Rullarmer	Fig. no: / Fig. nr: 3

No. / Ref.	Part no. / Delenr.	Qty. / Ant.	Description	Beskrivelse	Note / Anm.
1-35	UH440729		ROLLER ARMS	ARMER SAMLENR.	
1	UH440210	4	JOINT BEARING 60X90X44X36	LEDDLAGER 60X90X44X36	
2	UH440731	1	ROLLER ARM LH	ARM SV. VENSTRE	
3	UH440732	1	ROLLER ARM RH	ARM SV. HØYRE	
4	UH440285	2	SHAFT	AKSEL SV.	
5	UH440288	2	WASHER	BRIKKE Ø17-Ø76X8	
6	UH813870	2	HEX. BOLT M16X70-8.8 GALV	SEKSKANTSKRUE M16X70-8.8 ELZN	
7	UH866430	2	TENSION PIN 8X30X1.5	SPENNHYLSE 8X30	
8	UH873541	4	GREASE NIPPLE M6-45DEG.	SMØRENIPPEL M6-45GR.	
9	UH440212	8	BUSHING	FORING	
10	UH440887	4	HYDR. TUBE 15MM	HYDR. RØR 15 MM	
11	UH300868	8	TUBE CLAMP HALF Ø15 SINGLE	RØRKLAMMERHALVDEL Ø15 ENKEL	
12	UH440382	2	PLATE	TOPPLATE	
13	UH813335	4	HEX.BOLT M6X35-8.8 ELZN	SEKSKANTSKRUE M6X35-8.8 ELZN	
14	UH440888	4	COUPLING G-15-L	SKJØTEKUPLING RETT G-15-L	
	-				
22	UH440447	1	GUARD LEFT	SKJERM V.	
23	UH440448	1	GUARD RIGHT	SKJERM H.	
24	UH813630	4	HEX. BOLT M12X30-8.8 GALV.	SEKSKANTSKRUE M12X30-8.8 ELZN	
24	UH860163	8	WASHER Ø13-Ø24X2.5	BRIKKE Ø13-Ø24X2.5 ELZN	
24	UH852162	4	NYLOCK NUT M12 GALV	NYLOCKMUTTER M12 ELZN.	
25	UH440439	1	GUIDE LH	LEDEPLATE V. SV..	
26	UH440440	1	GUIDE RH	LEDEPLATE H. SV.	
27	UH813840	6	HEX. BOLT M16X40-8.8 GALV.	SEKSKANTSKRUE M16X40-8.8 ELZN	
27	UH860166	12	WASHER Ø17-Ø30X3	BRIKKE Ø17-Ø30X3 ELZN	
27	UH852166	6	NUT M16 GALV	NYLOCKMUTTER M16 ELZN.	
28	UH440249	2	BOLT	BOLT	
29	UH850166	4	HEX. NUT M16 GALV	SEKSKANTMUTTER M16-8 ELZN.	
30	UH873540	2	GREASE NIPPLE M6 STRAIGHT	SMØRENIPPEL M6 RETT	
31	UH441102	1	BRACKET	FESTEPLATE	
32	UH813420	2	HEX. BOLT M8X20-8.8 GALV	SEKSKANTSKRUE M8X20-8.8 ELZN	
32	UH850158	4	HEX. NUT M8-8 GALV.	SEKSKANTMUTTER M8-8 ELZN.	
32	UH852158	2	NYLOCK NUT M8 GALV.	NYLOCKMUTTER M8 ELZN.	
33	UH440393	2	CHAIN	KJETTING Ø8-24X720	
34	UH440394	4	COUPLING LINK	KOPLINGSLENKE	
35	UH440395	2	SHORTENING HOOK	INNKORTNINGSKROK	
	-				
36	UH440017	2	TENSION SPRING	STREKKFJØR Ø10-Ø60X345	
	-				
37	UH440531	1	HEISEFESTE SV.	HEISEFESTE SV.	
38	UH813830	4	HEX. BOLT M16X30-8.80 GALV.	SEKSKANTSKRUE M16X30-8.8 ELZN	
38	UH860166	4	WASHER Ø17-Ø30X3	BRIKKE Ø17-Ø30X3 ELZN	
	-				
40	UH441238	1	FLEXIBLE TUBING L=1400	FLEKSISLANGE INNV.Ø12.0 L=1400	
41	UH441237	1	FLEXIBLE TUBING L=3180	FLEKSISLANGE INNV.Ø12.0 L=3180	

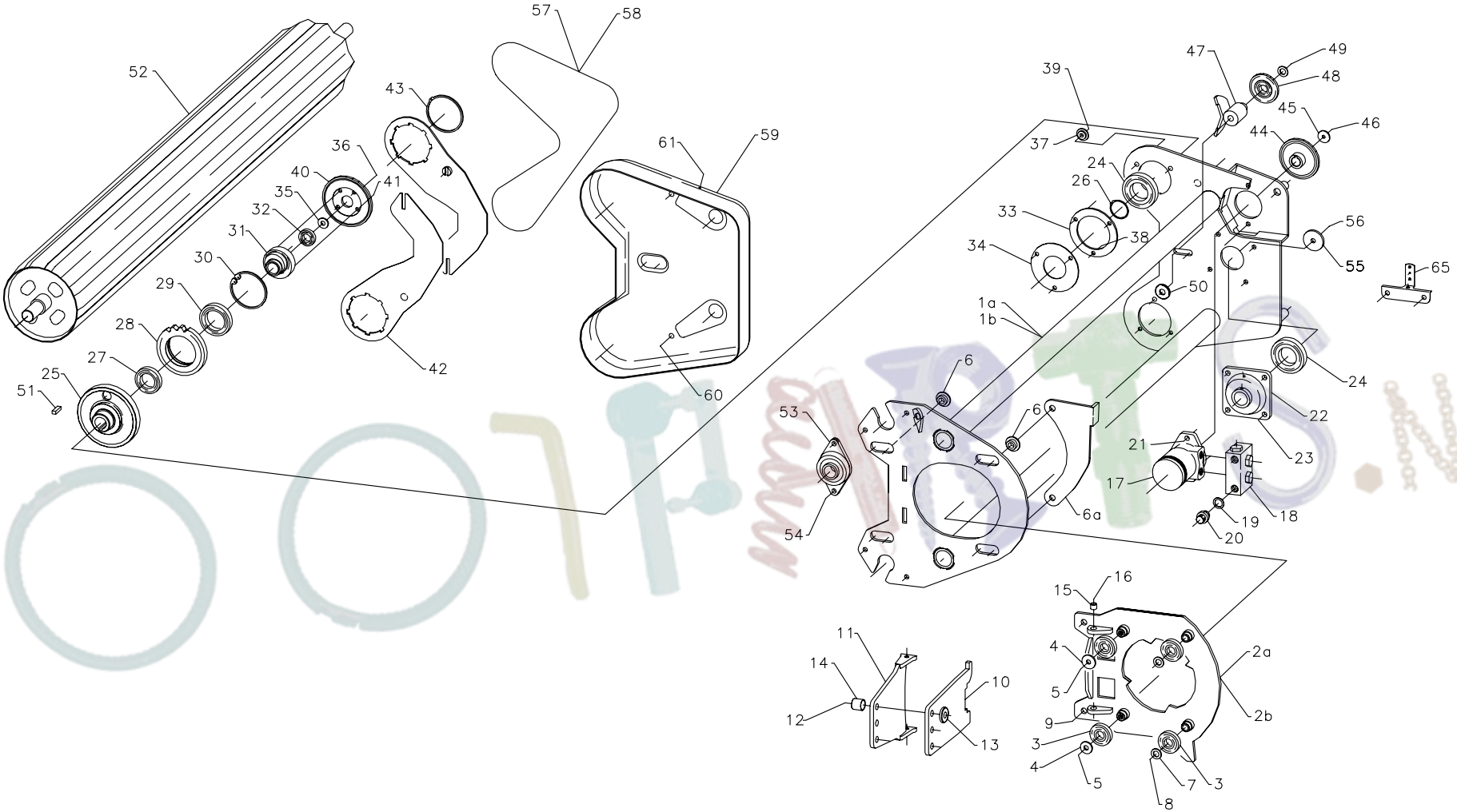

RE440711-1

Fig: 4

Page issue: / Sideutgave:	01	Implement: / Redskap:	7664	Big bale wrapper / Storballepakker
Date: / Dato:	1102	Unit: / Enhet:	Roller drive / Drivverk ruller	Fig. no: / Fig. nr: 4

No. / Ref.	Part no. / Delenr.	Qty. / Ant.	Description	Beskrivelse	Note / Anm.
1a-54	UH440711		ROLLER CRADDLE LH ASSY.	VOGGER KOMPL. V.	
1b-54	UH440712		ROLLER CRADDLE RH ASSY.	VOGGER KOMPL. H.	
1a	UH440719	1	ROLLER FRAME LH	RULLRAMME V. SV.	
1b	UH440720	1	ROLLER FRAME RH	RULLRAMME H. SV.	
2a	UH440425	1	LEFT PLATE	LAGERPLATE V. SV.	
2b	UH440426	1	RIGHT PLATE	LAGERPLATE H. SV.	
3	UH870163	4	RUNNING WHEEL SKF 361205	LØPERULL SKF 361205	
4	UH440180	2	WASHER Ø12.5-Ø40X5	BRIKKE Ø12.5-Ø40X5	
5	UH813631	2	HEX. BOLT M12X30-10.9 ELZN	SEKSKANTSKRUE M12X30-10.9 ELZN	
6	UH440189	4	COLLAR	HYLSE	
6a	UH441218	2	STOPPER FOR CRADDLE	STOPPER FOR VOGGE	
7	UH282613	2	WASHER	BRIKKE Ø17-Ø30X4	
8	UH813890	2	HEX. BOLT M16X90-8.8 GALV	6-KT.SKRUE M16X90-8.8 GALV.	
8	UH852166	2	NUT M16 GALV	NYLOCKMUTTER M16 ELZN.	
8	UH860166	2	WASHER Ø17-Ø30X3	BRIKKE Ø17-Ø30X3 ELZN	
9	UH813850	2	HEX. BOLT M16X50-8.8 GALV.	SEKSKANTSKRUE M16X50-8.8 ELZN	
9	UH852166	2	NUT M16 GALV	NYLOCKMUTTER M16 ELZN.	
10	UH440421	1	SPRING PLATE	FJÆR	
11	UH440422	1	SPRING PLATE	FJÆR SV.	
12	UH813870	3	HEX. BOLT M16X70-8.8 GALV	SEKSKANTSKRUE M16X70-8.8 ELZN	
13	UH410334	3	WASHER Ø17-Ø43X5 SPECIAL	BRIKKE Ø17-Ø43X5 SPESIAL	
13	UH852166	3	NUT M16 GALV	NYLOCKMUTTER M16 ELZN.	
14	UH410958	3	COLLAR 17-30X26	HYLSE Ø17-Ø30X26	
15	UH440432	2	BEARING LINING	LAGERFORING Ø12.2-Ø17/12	
16	UH813625	2	HEX. BOLT M12X25-8.8 GALV	SEKSKANTSKRUE M12X25-8.8 ELZN	
17a	UH900507	1	OIL MOTOR 130CCM SHAFT Ø25 TE130 (MF761)	OLJEMOTOR 130CCM AKSEL Ø25 TE130 (MF761)	
17b	UH900508	1	OIL MOTOR 165CCM SHAFT Ø25 TE165 (MF761)	OLJEMOTOR 165CCM AKSEL Ø25 TE165 (MF761)	
*	UH204501		OVERHAULED OIL MOTOR UH410791	RENOVERT OLJEMOTOR UH410791	
18	UH440857	1	DOUBLE OVER CENTRE VALVE	OVERSENTERVENTIL DOBBEL	
*	UH204532	2	OVERHAULED CENTRE VALVE UH440857	RENOVERT OVERSENTERVENTIL UH440857	
19	UH219669	2	SEAL 1/2" PP 45-D	PAKNINGSRING 1/2" BOND SEAL	
20	UH300971	2	HEXAGON NIPPLE 1/2"-1/2" BSP	ANSATS 1/2"-1/2" BSP UU	
21	UH813645	2	HEX. BOLT M12X45-8.8 GALV	SEKSKANTSKRUE M12X45-8.8 ELZN	
21	UH860163	2	WASHER Ø13-Ø24X2.5	BRIKKE Ø13-Ø24X2.5 ELZN	
21	UH852162	2	NYLOCK NUT M12 GALV	NYLOCKMUTTER M12 ELZN.	
21	UH870147	1	BALL BEARING SKF-FY40TF	KULELAGER SKF-FY40TF	
	-				
23	UH813645	4	HEX. BOLT M12X45-8.8 GALV	SEKSKANTSKRUE M12X45-8.8 ELZN	
23	UH860163	4	WASHER Ø13-Ø24X2.5	BRIKKE Ø13-Ø24X2.5 ELZN	
23	UH852162	4	NYLOCK NUT M12 GALV	NYLOCKMUTTER M12 ELZN.	
24	UH870757	2	BALL BEARING 6211-2RS	KULELAGER 6211-2RS	
25	UH440704	2	GEAR 21T	TANNHJUL 21T	
26	UH868455	2	CIRCLIP A55X2	LÅSERING UTV. A55X2	
27	UH870647	2	BALL BEARING 6009-2RS	KULELAGER 6009-2RS	
28	UH440705	2	GEAR 19T	TANNHJUL 19T	
29	UH870662	2	BALL BEARING 6012-2RS	KULELAGER 6012-2RS	

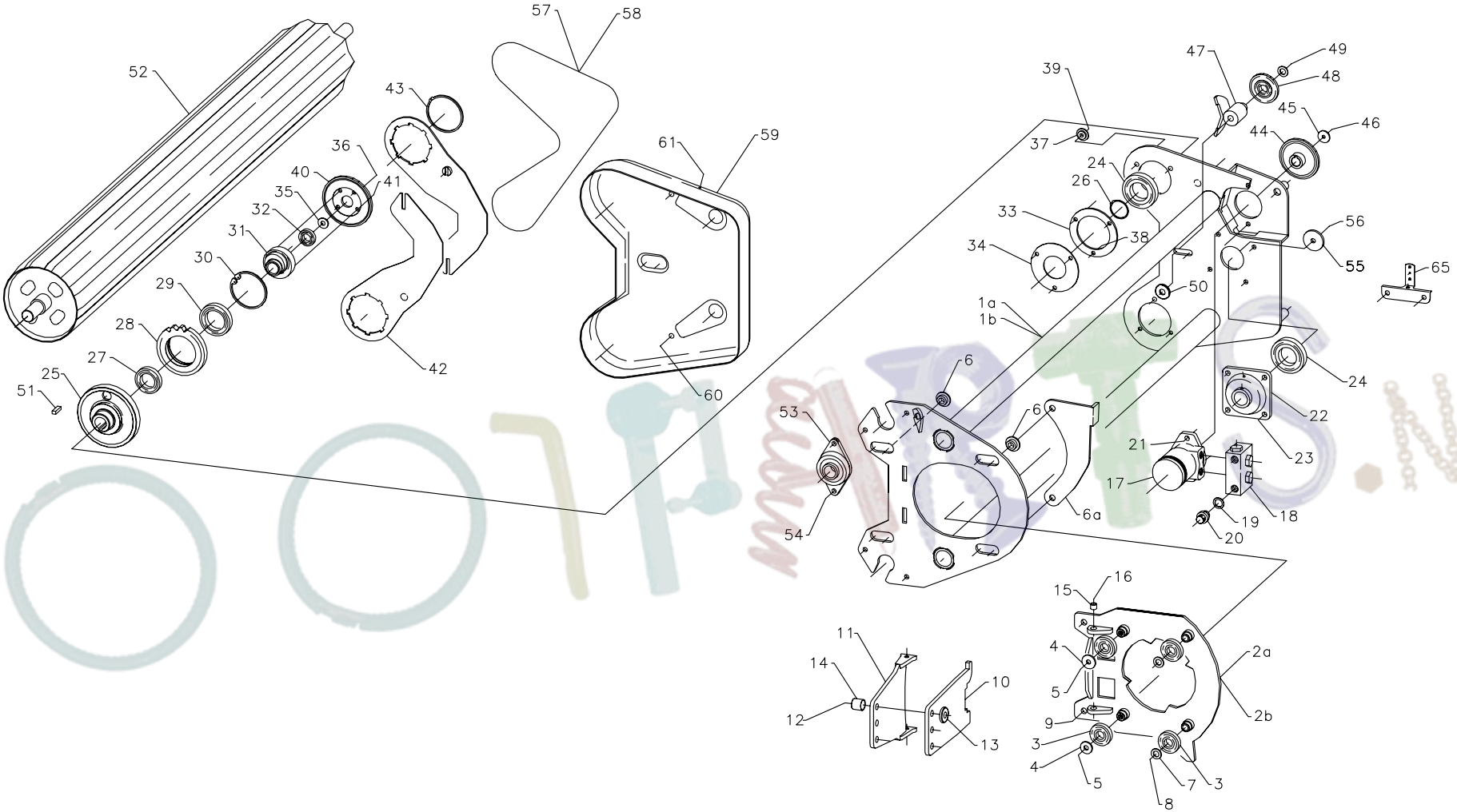

RE440711-1

Fig: 4

Page issue: / Sideutgave:	01	Implement: / Redskap:	7664	Big bale wrapper / Storballepakker
Date: / Dato:	1102	Unit: / Enhet:	Roller drive / Drivverk ruller	Fig. no: / Fig. nr: 4

No. / Ref.	Part no. / Delenr.	Qty. / Ant.	Description	Beskrivelse	Note / Anm.
30	UH868595	2	CIRCLIP I95X3.00	LÅSERING INNV. I 95X3	
31	UH440707	2	EXCENTRIC WHEEL	EKSENTERHJUL	
32	UH870728	2	BEARING 6205-2RS-CR	KULELAGER 6205-2RS-C3 SPESIAL	
33	UH440745	2	STØTTERING	STØTTERING	
34	UH440746	2	HOLDEPLATE	HOLDEPLATE	
35	UH214263	2	WASHER	BRIKKE Ø12.5-Ø30X4	
36	UH813635	2	HEX. BOLT M12X35-8.8 GALV	SEKSKANTSKRUE M12X35-8.8 ELZN	
37	UH440747	2	BUSHING Ø10.3X10.5-Ø24/5.5	BØSSING Ø10.3X10.5-Ø24/5.5	
38	UH813535	4	HEX. BOLT M10X35-8.8 GALV.	SEKSKANTSKRUE M10X35-8.8 ELZN	
38	UH860160	8	WASHER Ø10.5-Ø21X2	BRIKKE Ø10.5-Ø21X2 ELZN	
39	UH813540	2	HEX. BOLT M10X40-8.8 GALV.	SEKSKANTSKRUE M10X40-8.8 ELZN	
39	UH852160	6	NYLOCK NUT M10 GALV.	NYLOCKMUTTER M10 ELZN.	
40	UH440764	2	SPROCKET 3/4" 23T W/GUIDE	KJEDEHJUL 3/4" 23T M/STYRING	
41	UH813520	8	HEX. BOLT M10X20-8.8 GALV.	SEKSKANTSKRUE M10X20-8.8 ELZN	
42	UH440723	2	HOLDEPLATE SV.	HOLDEPLATE SV.	
43	UH868495	2	CIRCLIP A110X4	LÅSERING UTV. A110X4	
44	UH440765	1	SPROCKET 3/4" 21T	KJEDEHJUL 3/4" 21T SV.	
45	UH410141	1	WASHER Ø9-Ø35X4	BRIKKE Ø9-Ø35X4	
46	UH813420	1	HEX. BOLT M8X20-8.8 GALV	SEKSKANTSKRUE M8X20-8.8 ELZN	
47	UH440726	1	KJEDESTRAMMER SV.	KJEDESTRAMMER SV.	
48	UH303728	1	SPROCKET 3/4" 13T W/BEARING	KJEDEHJUL 3/4" 13T M/LAGER	
49	UH860166	1	WASHER Ø17-Ø30X3	BRIKKE Ø17-Ø30X3 ELZN	
49	UH813903	1	HEX. BOLT M16X130-8.8 GALV.	SEKSKANTSKRUE M16X130-8.8 ELZN	
49	UH852166	2	NUT M16 GALV	NYLOCKMUTTER M16 ELZN.	
50	UH410334	1	WASHER Ø17-Ø43X5 SPECIAL	BRIKKE Ø17-Ø43X5 SPESIAL	
51	UH313334	2	KEY 10X8X40	KILE 10X8X40	
52	UH440715	2	ROLLER	RULL SV.	
53	UH870146	2	BALL BEARING SKF-FYTB35TF	KULELAGER SKF-FYTB35TF	
54	UH813640	4	HEX. BOLT M12X40-8.8 GALV	SEKSKANTSKRUE M12X40-8.8 ELZN	
54	UH852162	4	NYLOCK NUT M12 GALV	NYLOCKMUTTER M12 ELZN.	
	-				
55	UH440187	2	WASHER	BRIKKE Ø13-Ø60X8	
56	UH441116	2	SCREW	SKRUE M/M5 HULL	
57	UH901847	2	CHAIN 3/4"X1619	RULLEKJEDE 3/4"X1619	
58	UH901802	2	CHAIN CONNECTOR 3/4"	RULLEKJEDELÅS 3/4"	
59	UH440713	2	PLASTIC COVER	PLASTIKK DEKSEL	
60	UH860163	8	WASHER Ø13-Ø24X2.5	BRIKKE Ø13-Ø24X2.5 ELZN	
60	UH813630	8	HEX. BOLT M12X30-8.8 GALV.	SEKSKANTSKRUE M12X30-8.8 ELZN	
61	UH873540	2	GREASE NIPPLE M6 STRAIGHT	SMØRENIPPEL M6 RETT	
	-				
65	UH441125	2	BRACKET FOR ANALOGUE SENSOR	SENSORFESTE	

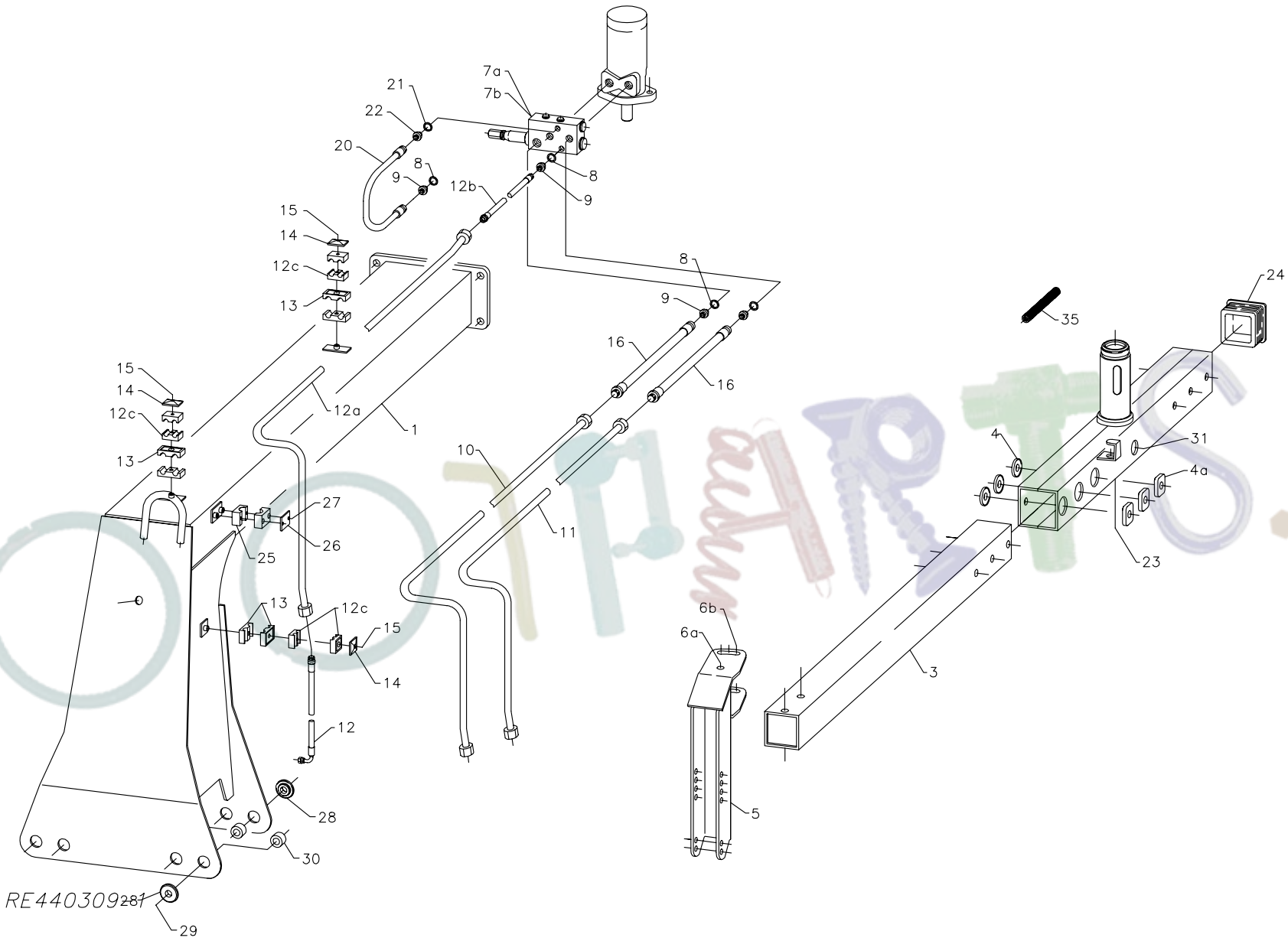
7a
7b
21
22
20
8
9
12b
15
14
12c
13
16
10
11
12a
1
27
26
25
12
28
30
29
RE440309281
35
24
4
31
4a
23
6b
6a
3
5

Fig: 5

Page issue: / Sideutgave:	01	Implement: / Redskap:	7664	Big bale wrapper / Storballepakker
Date: / Dato:	1102	Unit: / Enhet:	Satellite mast / Tårn for satellitt	Fig. no: / Fig. nr: 5

No. / Ref.	Part no. / Delenr.	Qty. / Ant.	Description	Beskrivelse	Note / Anm.
*	UH440309		TÅRN KOMPL.	TÅRN KOMPL.	
1	UH441206	1	ARM SV.	ARM SV.	
2a	UH813860	2	HEX. BOLT M16X60-8.8 GALV.	SEKSKANTSKRUE M16X60-8.8 ELZN	
2b	UH813870	2	HEX. BOLT M16X70-8.8 GALV	SEKSKANTSKRUE M16X70-8.8 ELZN	
2	UH860166	6	WASHER Ø17-Ø30X3	BRIKKE Ø17-Ø30X3 ELZN	
2	UH860208	4	WASHER Ø18-SQ32/36X3/5.9 CON.	BRIKKE Ø18-4KT32/36X3/5.9 KON.	
2	UH852166	4	NUT M16 GALV	NYLOCKMUTTER M16 ELZN.	
4	UH813902	3	HEX. BOLT M16X120-8.8 GALV.	SEKSKANTSKRUE M16X120-8.8 ELZN	
4	UH410334	6	WASHER Ø17-Ø43X5 SPECIAL	BRIKKE Ø17-Ø43X5 SPESIAL	
4	UH852166	3	NUT M16 GALV	NYLOCKMUTTER M16 ELZN.	
7a	UH441177	1	BRAKE VALVE DOUBLE SATELITE	BREMSEVENTIL DOBBEL SATELLITT	
7b	UH440859	1	BRAKE VALVE	BREMSEVENTIL	
8	UH219669	2	SEAL 1/2" PP 45-D	PAKNINGSRING 1/2" BOND SEAL	
9	UH300971	2	HEXAGON NIPPLE 1/2"-1/2" BSP	ANSATS 1/2"-1/2" BSP UU	
10	UH440074	1	HYDR. TUBE 15MM	HYDR. RØR 15 MM	
11	UH440075	1	HYDR. TUBE 15MM	HYDR. RØR 15 MM	
12	UH440831	1	HYD.HOSE 1/4" 1620 S12I04-90D	HYD.SL.1/4" 1620 S12I04-90G	
12a	UH440836	1	HYDR. TUBE 12MM (1822)	HYDR. RØR 12MM (1822)	
12b	UH453399	1	HYDR.HOSE 1/4" 530	HYD.SL. 1/4" 530 I04S12-0G	
12c	UH300974	6	T-JUNCTION R1/4"	T-KOPLING 1/4" BSP III	
13	UH300878	12	TUBE CLAMP HALF Ø15 DOUBLE	RØRKLAMMERHALVDEL Ø15 DOBBEL	
14	UH300885	3	PLATE 14-18 DOUBLE	TOPPLATE 14-18 DOBBEL	
15	UH813360	3	HEX. BOLT M6X60-8.8 GALV	SEKSKANTSKRUE M6X60-8.8 ELZN	
16	UH453398	2	HUDR.HOSE 1/2" 560	HYD.SL. 1/2" 560 I08S15-0G	
17	UH219669	2	SEAL 1/2" PP 45-D	PAKNINGSRING 1/2" BOND SEAL	
18	UH300971	2	HEXAGON NIPPLE 1/2"-1/2" BSP	ANSATS 1/2"-1/2" BSP UU	
20	UH440053	1	HYDR. HOSE 1/4" 470	HYD.SL.1/4" 470 I04I04-0G	
21	UH300966	2	SEAL 1/4"	PAKNINGSRING 1/4" BOND SEAL	
22	UH300957	2	NIPPLE R1/4"-R1/4"	ANSATS 1/4"-1/4" BSP UU	
23	UH911266	1	END PLUGG Ø60	ENDEPLUGG Ø60	
	-				
25	UH300884	2	CLAMP SINGLE	RØRKLAMMERHALVDEL Ø25 ENKEL	
26	UH300867	1	TOP PLATE Ø22	TOPPLATE 20-25 ENKEL	
27	UH813340	2	HEX. BOLT M6X40-8.8 GALV	SEKSKANTSKRUE M6X40-8.8 ELZN	
	-				
28	UH440299	16	410958	BRIKKE	
29	UH813870	8	HEX. BOLT M16X70-8.8 GALV	SEKSKANTSKRUE M16X70-8.8 ELZN	
29	UH852166	8	NUT M16 GALV	NYLOCKMUTTER M16 ELZN.	
30	UH410958	0	COLLAR 17-30X26	HYLSE Ø17-Ø30X26	
	-				
31	UH314313	1	PLUG PE11	TETNINGSPLUGG PE11	
	-				
35	UH441239	1	FLEXIBLE TUBING L=3460	FLEKSISLANGE INNV.Ø12.8 L=3460	

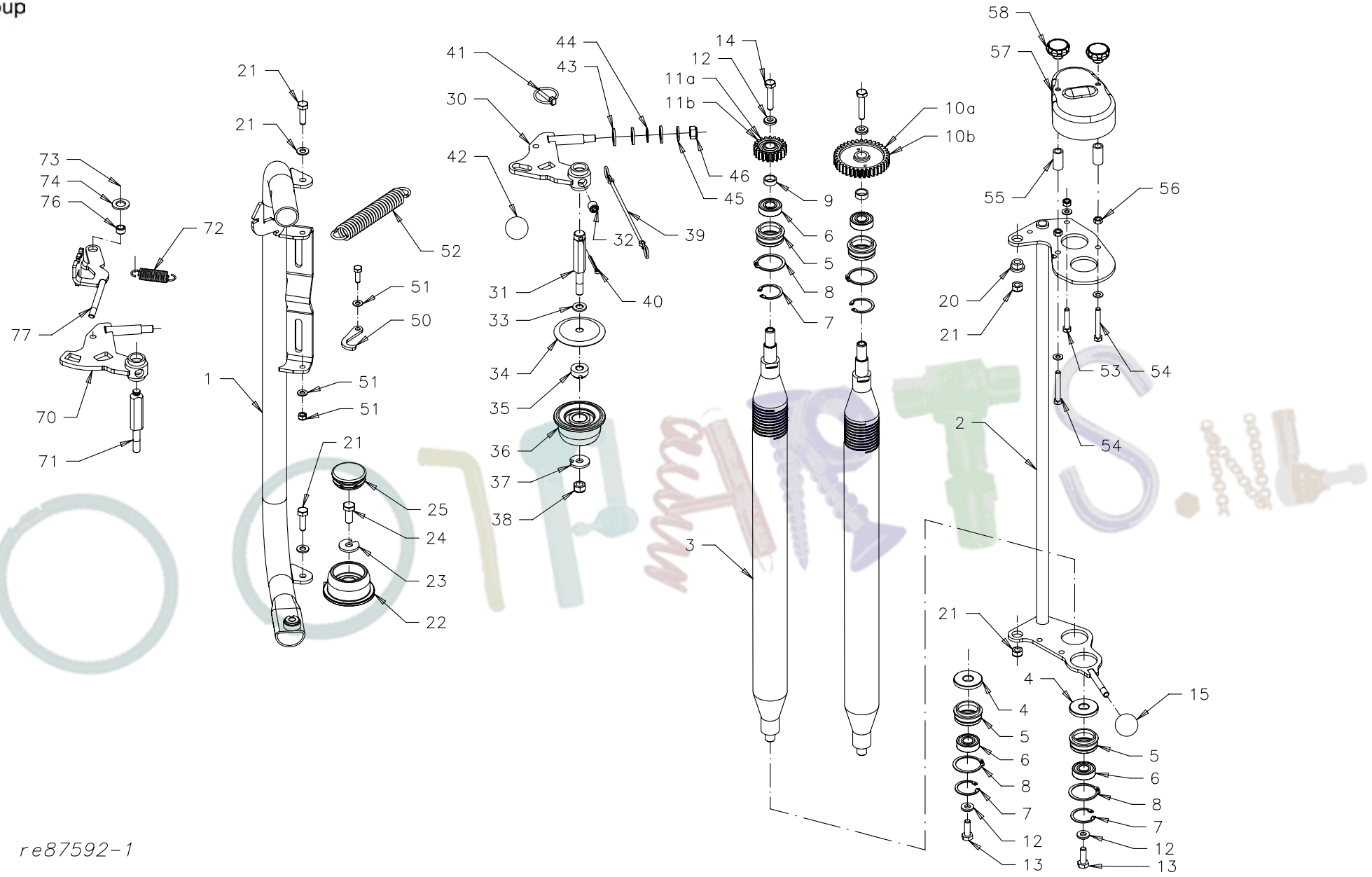
re87592-1
1
2
3
4
5
6
7
8
9
10a
10b
11a
11b
12
13
14
15
20
21
22
23
24
25
30
31
32
33
34
35
36
37
38
39
40
41
42
43
44
45
46
50
51
52
53
54
55
56
57
58
70
71
72
73
74
76
77

Fig: 6

Page issue: / Sideutgave:	01	Implement: / Redskap:	7664	Big bale wrapper / Storballepakker
Date: / Dato:	1102	Unit: / Enhet:	Prestretcher / Forstrekker	Fig. no: / Fig. nr: 6

No. / Ref.	Part no. / Delenr.	Qty. / Ant.	Description	Beskrivelse	Note / Anm.
1	UH443050	1	FILMROLLER HOLDER	FILMRULLHOLDER SV.	
2b-15	UH442991	1	ROLLER HOLDER 22:36 ASSY.	RULLHOLDER 22:36 MONT.	
2	UH442966	1	ROLL HOLDER W.	RULLHOLDER SV.	
3	UH442990	2	PRESTRECHER ROLLER 750MM ALU	FORSTREKKERRULL 750MM ALU	
4	UH410883	2	BEARING COVER	DEKSEL	
5	UH410884	4	LOWER BEARING HOUSING	LAGERHUS NEDRE	
6	UH870718	4	BALL BEARING 6203-2RS1-C3	KULELAGER 6203 2RS-C3 SPESIAL	
7	UH868540	4	CIRCLIP I40X1.75	LÅSERING INNV. I 40X1.75	
8	UH868447	4	CIRCLIP A47X1.75	LÅSERING UTV. A47X1.75	
9	UH442976	2	BUSHING Ø17,5-Ø22X8	HYLSE Ø17,5-Ø22X8	
10b	UH442980	1	SPROCKET M2.5/36T-Ø17	TANNHJUL M2.5/36T-Ø17	
11b	UH442981	1	SPROCKET M2.5/22T-Ø17	TANNHJUL M2.5/22T-Ø17	
12	UH410842	4	WASHER Ø10.5-Ø22X4	BRIKKE Ø10.5-Ø22X4	
13	UH813530	2	HEX. BOLT M10X30-8.8 GALV.	SEKSKANTSKRUE M10X30-8.8 ELZN	
14	UH810550	2	HEX. BOLT M10X50-8.8 GALV.	6KT.SKR.HELGJ.M10X50-8.8 ELZN	
15	UH255767	1	KNOB Ø40 M10	KULE Ø40 M10 GJ.	
	-				
20	UH300562	2	BUSHING Ø11X13-Ø19/9	BØSSING Ø11X13-Ø19/9	
21	UH813535	2	HEX. BOLT M10X35-8.8 GALV.	SEKSKANTSKRUE M10X35-8.8 ELZN	
21	UH860160	2	WASHER Ø10.5-Ø21X2	BRIKKE Ø10.5-Ø21X2 ELZN	
21	UH852160	2	NYLOCK NUT M10 GALV.	NYLOCKMUTTER M10 ELZN.	
22	UH442972	1	FLANGE ROLLER Ø74	FLENSRULL Ø74	
23	UH442954	1	WASHER Ø12,5-Ø35X4 W/NOTCH OUTS.	BRIKKE Ø12,5-Ø35X4 M/HAKK UTV.	
25	UH911266	1	END PLUGG Ø60	ENDEPLUGG Ø60	
30-47	UH442984	1	ROLLER LOCK ASSY.	RULL-LÅS MONTERT	
30	UH442985	1	ROLLER ARM	RULLARM SV.	
31	UH442989	1	ROLLER ADJUSTER ROD	TRINSESTILLSTANG	
32	UH831716	1	HEADLESS SCREW M16X16	GJENGESTIFT 6KT-HOL M16X16	
33	UH860163	1	WASHER Ø13-Ø24X2.5	BRIKKE Ø13-Ø24X2.5 ELZN	
34	UH442982	1	CIRCULAR CAP Ø90/Ø13	RONDELL Ø90/Ø13	
35	UH442952	1	BUSHING Ø12X14-Ø24,8/4 W/GROOVE	BØSSING Ø12X14-Ø24,8/4 M/SPOR	
36	UH442972	1	FLANGE ROLLER Ø74	FLENSRULL Ø74	
37	UH442954	1	WASHER Ø12,5-Ø35X4 W/NOTCH OUTS.	BRIKKE Ø12,5-Ø35X4 M/HAKK UTV.	
38	UH852162	1	NYLOCK NUT M12 GALV	NYLOCKMUTTER M12 ELZN.	
39	UH931825	1	SECURING STRAP Ø17-250-Ø17	PLASTSTROPP Ø17-250-Ø17	
40	UH865325	1	SPLIT PIN 6,3 X 25	SPLINT 6.3X25 GALV.	
41	UH867056	1	RING PIN 6 GALV	RINGPINNE Ø6 ELZN	
42	UH255767	1	KNOB Ø40 M10	KULE Ø40 M10 GJ.	
43	UH860166	3	WASHER Ø17-Ø30X3	BRIKKE Ø17-Ø30X3 ELZN	
44	UH868603	1	SUPPORT RING 17X24X1.5	STØTTERING 17X24X1.5	
45	UH860163	1	WASHER Ø13-Ø24X2.5	BRIKKE Ø13-Ø24X2.5 ELZN	
46	UH852162	1	NYLOCK NUT M12 GALV	NYLOCKMUTTER M12 ELZN.	
	-				
50	UH442959	1	LOCKING HOOK	LÅS	
51	UH813425	1	HEX. BOLT M8X25-8.8 GALV.	SEKSKANTSKRUE M8X25-8.8 ELZN	
51	UH860158	1	WASHER Ø8.4-Ø17X1.6	BRIKKE Ø8.4-Ø17X1.6 ELZN	

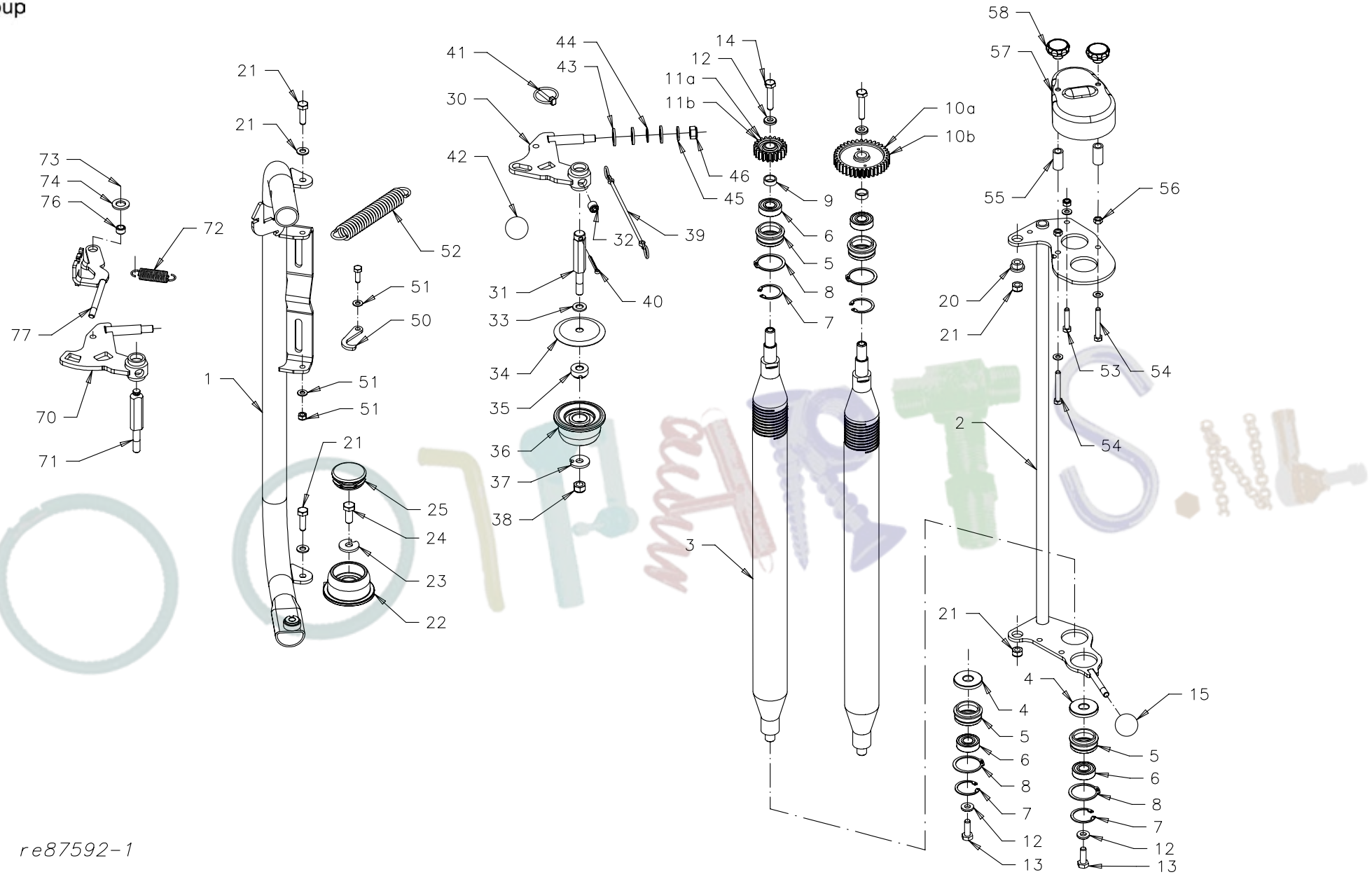
re87592-1
1
2
3
4
5
6
7
8
9
10a
10b
11a
11b
12
13
14
15
20
21
22
23
24
25
30
31
32
33
34
35
36
37
38
39
40
41
42
43
44
45
46
50
51
52
53
54
55
56
57
58
70
71
72
73
74
76
77

Fig: 6

Page issue: / Sideutgave:	01	Implement: / Redskap:	7664	Big bale wrapper / Storballepakker
Date: / Dato:	1102	Unit: / Enhet:	Prestretcher / Forstrekker	Fig. no: / Fig. nr: 6

No. / Ref.	Part no. / Delenr.	Qty. / Ant.	Description	Beskrivelse	Note / Anm.
51	UH852158	1	NYLOCK NUT M8 GALV.	NYLOCKMUTTER M8 ELZN.	
52	UH334540	1	SPRING Ø4-Ø26X140	STREKKFJØR Ø4-Ø26X140	
53	UH813440	1	HEX. BOLT M8X40-8.8 GALV.	SEKSKANTSKRUE M8X40-8.8 ELZN	
53	UH850158	1	HEX. NUT M8-8 GALV.	SEKSKANTMUTTER M8-8 ELZN.	
53	UH860158	1	WASHER Ø8.4-Ø17X1.6	BRIKKE Ø8.4-Ø17X1.6 ELZN	
54	UH852158	1	NYLOCK NUT M8 GALV.	NYLOCKMUTTER M8 ELZN.	
54	UH813460	2	HEX. BOLT M8X60-8.8 GALV	SEKSKANTSKRUE M8X60-8.8 ELZN	
55	UH256941	2	SPACER Ø11.4-Ø17.2X35	HYLSE Ø11.4-Ø17.2X35	
56	UH850158	2	HEX. NUT M8-8 GALV.	SEKSKANTMUTTER M8-8 ELZN.	
57	UH442973	1	COVER	DEKSEL	
58	UH855378	2	HANDWHEEL M8	STJERNERATT M8	
59	UH850158	2	HEX. NUT M8-8 GALV.	SEKSKANTMUTTER M8-8 ELZN.	
	-				
70	UH443046	1	ROLLER ARM	RULLARM SV.	
71	UH443040	1	ROLLER ADJUSTER	TRINSESTILLSTANG	
72	UH300666	1	TENSION SPRING Ø2.2-Ø17.8X76	STREKKFJØR Ø2.2-Ø17.8X76	
73	UH813535	1	HEX. BOLT M10X35-8.8 GALV.	SEKSKANTSKRUE M10X35-8.8 ELZN	
74	UH860160	2	WASHER Ø10.5-Ø21X2	BRIKKE Ø10.5-Ø21X2 ELZN	
75	UH860166	1	WASHER Ø17-Ø30X3	BRIKKE Ø17-Ø30X3 ELZN	
76	UH215069	1	SPACER	HYLSE Ø10.4-Ø16X10	
77	UH443042	1	LOCK	LÅS SV.	

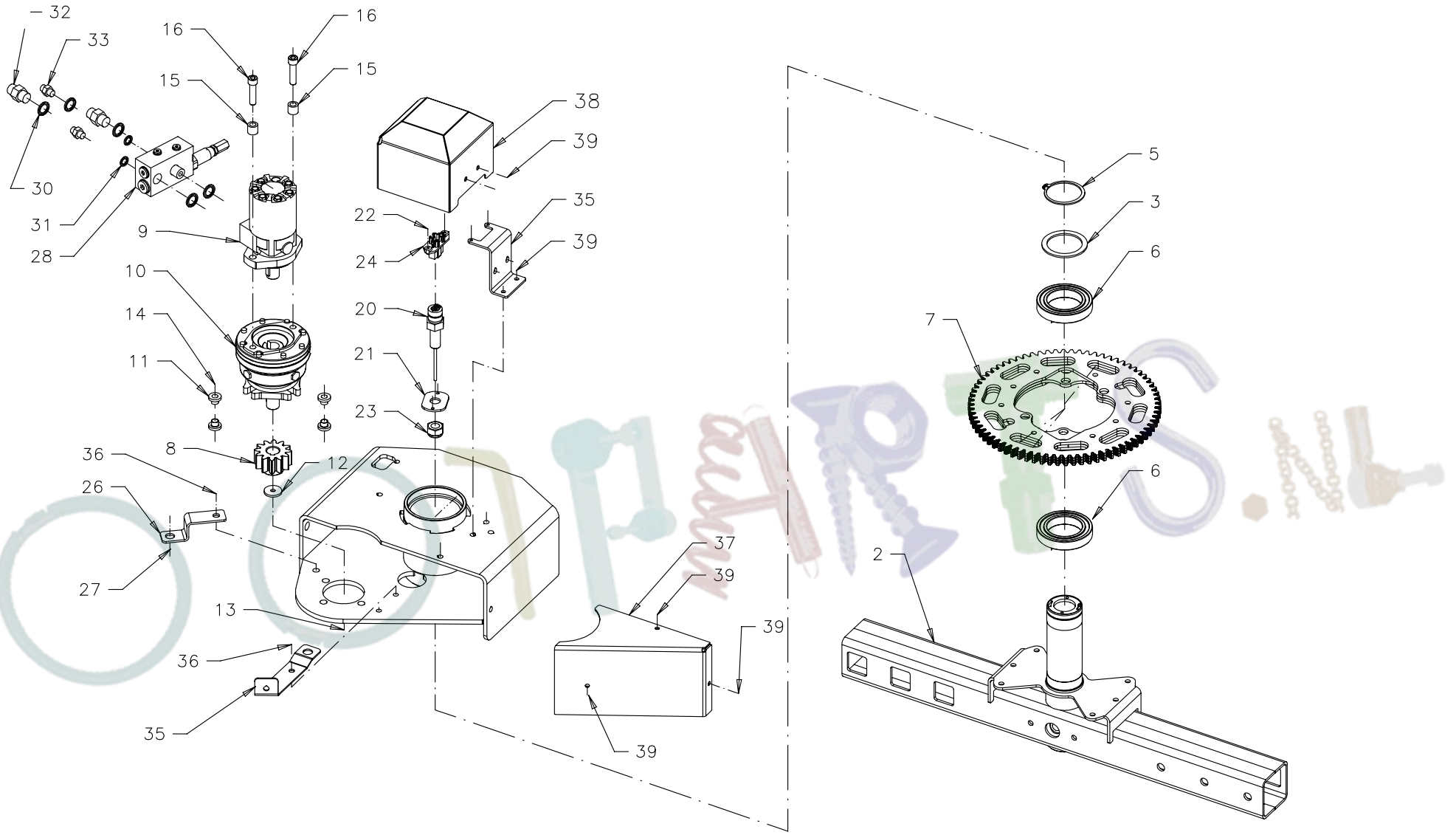
32
33
16
16
15
15
38
39
35
39
22
24
30
31
28
9
10
14
11
20
21
23
8
12
36
26
27
13
36
35
37
39
39
39
5
3
6
7
6
2
re453380-1

Fig: 7

Page issue: / Sideutgave:	01	Implement: / Redskap:	7664	Big bale wrapper / Storballepakker
Date: / Dato:	1202	Unit: / Enhet:	Drive unit / Drivenhet	Fig. no: / Fig. nr: 7

No. / Ref.	Part no. / Delenr.	Qty. / Ant.	Description	Beskrivelse	Note / Anm.
	UH453375		DRIVEUNIT BASIC	DRIVVERK BASIS	
2	UH453320	1	SWING ARM	SVINGARM SV.	
3	UH868614	1	SUPPORT RING 70X90X3.5	STØTTERING 70X90X3.5	
4	UH813540	1	HEX. BOLT M10X40-8.8 GALV.	SEKSKANTSKRUE M10X40-8.8 ELZN	
4	UH852160	1	NYLOCK NUT M10 GALV.	NYLOCKMUTTER M10 ELZN.	
5	UH868470	1	CIRCLIP A70X2.5	LÅSERING UTV. A70X2.5	
6	UH870672	2	BALL BEARING 6014-2RS	KULELAGER 6014-2RS	
7	UH453387	1	GEAR M5-74T ASSY	GIR M5-74T KOMPL.	
8	UH414048	1	SPROCKET M5/12T-Ø25	TANNHJUL M5/12T-Ø25	
9	UH900508	1	OIL MOTOR 165CCM SHAFT Ø25 TE165 (MF761)	OLJEMOTOR 165CCM AKSEL Ø25 TE165 (MF761)	
*	UH900501	1	SEAL KIT FOR MF761 MOTOR	PAKNINGSSETT FOR MF761 MOTOR	
10	UH451101	1	DISC BRAKE DG-RF/288 OMR	LAMELLBREMS DG-RF/288 OMR	
11	UH441217	6	BUSHING Ø12X15-Ø14/10	BØSSING Ø12X15-Ø14/10	
12	UH410141	1	WASHER Ø9-Ø35X4	BRIKKE Ø9-Ø35X4	
13	UH813420	1	HEX. BOLT M8X20-8.8 GALV	SEKSKANTSKRUE M8X20-8.8 ELZN	
14	UH813650	3	HEX. BOLT M12X50-8.8 GALV.	SEKSKANTSKRUE M12X50-8.8 ELZN	
14	UH852162	3	NYLOCK NUT M12 GALV	NYLOCKMUTTER M12 ELZN.	
14	UH860163	3	WASHER Ø13-Ø24X2.5	BRIKKE Ø13-Ø24X2.5 ELZN	
15	UH440136	2	COLLAR Ø12.2-Ø20X18	HYLSE Ø12.2-Ø20X18	
16	UH825650	2	CYLINDER SCREW M12X50-12.9	SYL.SKR. M/6KT.HOL M12X50-12.9	
	-				
20	UH450572	1	AKSEL M/SLEPERING KOMPL.	AKSEL M/SLEPERING KOMPL.	
21	UH453338	1	WASHER Ø20,5	BRIKKE Ø20,5	
22	UH839260	2	COUNTER SUNK SCREW M5 X 10	SENKSKRUE M/KRYSSPOR M5X10 ELZN	
23	UH852167	1	NYLOCK NUT M20 GALV	NYLOCKMUTTER M20 ELZN.	
24	UH450585	1	BRUSH FOR COLLECTOR	BØRSTE FOR SLEPERING	
25	UH453335	1	BRACKET FOR SLIPRING	BRAKETT FOR SLEPERING	
26	UH453395	1	BRACKET	SENSORFESTE	
27	UH813635	1	HEX. BOLT M12X35-8.8 GALV	SEKSKANTSKRUE M12X35-8.8 ELZN	
27	UH852162	1	NYLOCK NUT M12 GALV	NYLOCKMUTTER M12 ELZN.	
28	UH440859	1	BRAKE VALVE	BREMSEVENTIL	
30	UH219669	6	SEAL 1/2" PP 45-D	PAKNINGSRING 1/2" BOND SEAL	
31	UH300966	2	SEAL 1/4"	PAKNINGSRING 1/4" BOND SEAL	
32	UH300971	2	HEXAGON NIPPLE 1/2"-1/2" BSP	ANSATS 1/2"-1/2" BSP UU	
33	UH300957	2	NIPPLE R1/4"-R1/4"	ANSATS 1/4"-1/4" BSP UU	
	-				
35	UH453367	1	BRACKET	SENSORFESTE	
36	UH813525	2	HEX. BOLT M10X25-8.8 GALV.	SEKSKANTSKRUE M10X25-8.8 ELZN	
36	UH852160	2	NYLOCK NUT M10 GALV.	NYLOCKMUTTER M10 ELZN.	
37	UH453371	1	COVER	DEKSEL FOR SD1	
38	UH453345	1	SLIPRINGBOX	SLEPERINGSBOKS SV.	
39	UH862138	7	NUT	BLINDMUTTER M8X20,5Ø11 RIFLET	
39	UH813420	7	HEX. BOLT M8X20-8.8 GALV	SEKSKANTSKRUE M8X20-8.8 ELZN	
39	UH860158	7	WASHER Ø8.4-Ø17X1.6	BRIKKE Ø8.4-Ø17X1.6 ELZN	

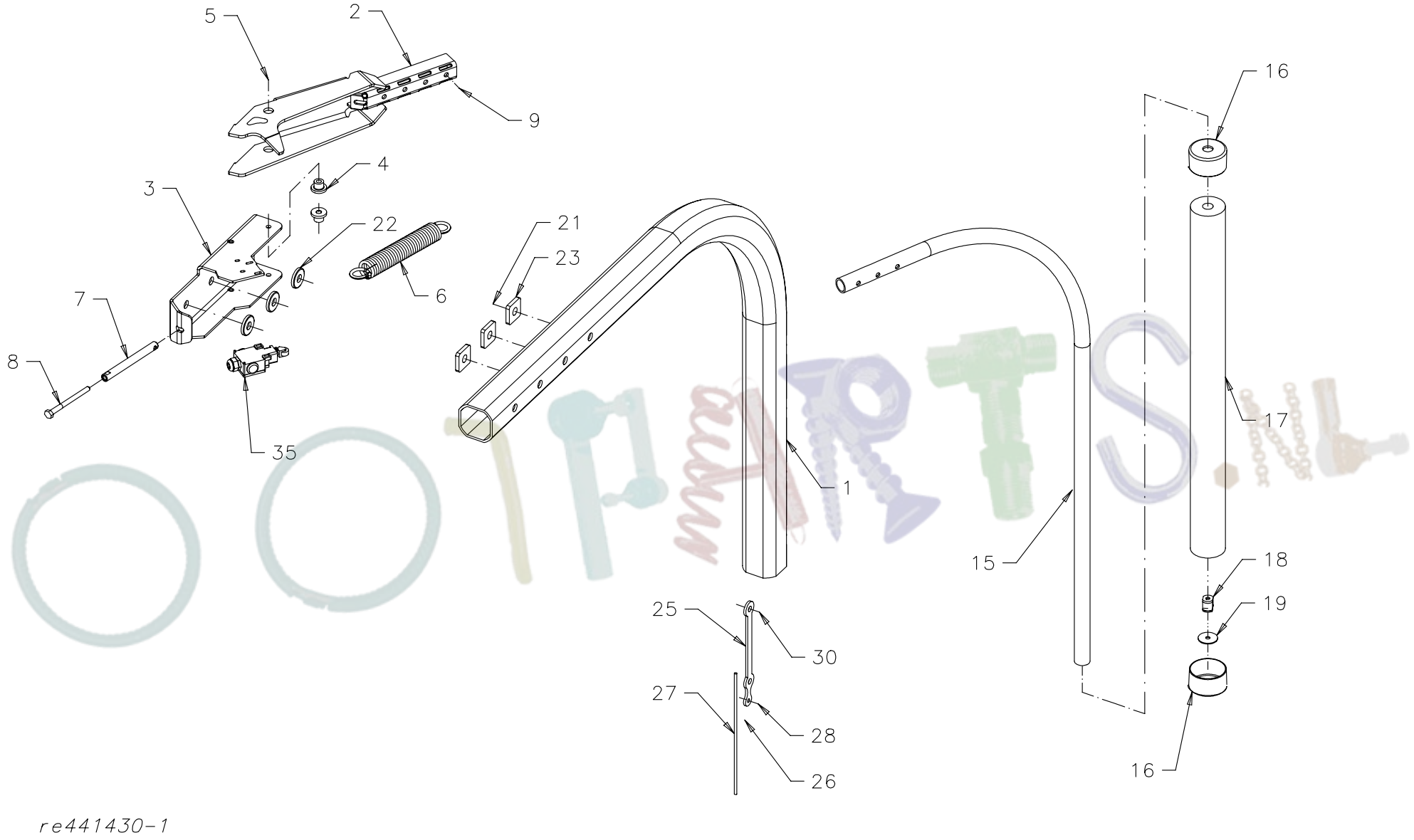

Fig: 8

Page issue: / Sideutgave:	01	Implement: / Redskap:	7664	Big bale wrapper / Storballepakker
Date: / Dato:	1102	Unit: / Enhet:	Film pre-stretcher and safety arms / Forstrekker og sikringsarmer	Fig. no: / Fig. nr: 8

No. / Ref.	Part no. / Delenr.	Qty. / Ant.	Description	Beskrivelse	Note / Anm.
1	UH441651	1	ALUMINIUM PROFILE 80X80 7655 MAIN ARM	ALUPROFIL 80X80 7655/HOVEDARM	
2-9	UH441400	1	SAFETY ARMBRACKET ASSY	SIKRINGSARMFESTE KOMPL.	
2	UH441406	1	BRACKET	FESTE SV.	
3	UH442588	1	BRACKET	BRAKETT	
4	UH410844	2	BUSHING Ø10.2X19-Ø20/14	BØSSING Ø10.2X19-Ø20/14	
5	UH813540	2	HEX. BOLT M10X40-8.8 GALV.	SEKSKANTSKRUE M10X40-8.8 ELZN	
5	UH860160	2	WASHER Ø10.5-Ø21X2	BRIKKE Ø10.5-Ø21X2 ELZN	
5	UH852160	2	NYLOCK NUT M10 GALV.	NYLOCKMUTTER M10 ELZN.	
6	UH441412	1	SPRING Ø6-Ø40X260	STREKKFJØR Ø6-Ø40X260	
7	UH441411	1	BUSHING	JUSTERHYLSE	
8	UH810604	1	HEX. BOLT M10X140-8.8 GALV	6KT.SKR.HELGJ.M10X140-8.8 ELZN	
8	UH860160	1	WASHER Ø10.5-Ø21X2	BRIKKE Ø10.5-Ø21X2 ELZN	
9	UH813560	2	HEX. BOLT M10X60-8.8 GALV.	SEKSKANTSKRUE M10X60-8.8 ELZN	
9	UH860160	4	WASHER Ø10.5-Ø21X2	BRIKKE Ø10.5-Ø21X2 ELZN	
9	UH852160	2	NYLOCK NUT M10 GALV.	NYLOCKMUTTER M10 ELZN.	
	-				
15	UH441441	1	TUBE	RØR	
16	UH440344	2	CAP	KAPSEL	
17	UH441442	1	LINING TUBE Ø72XØ28X1000	POLSTRING Ø72XØ28X1000	
18	UH441443	1	ENDPLUG	ENDEPLUGG	
19	UH440323	1	WASHER Ø9-Ø40X2	BRIKKE Ø9-Ø40X2	
20	UH813430	1	HEX. BOLT M8X30-8.8 GALV.	SEKSKANTSKRUE M8X30-8.8 ELZN	
21	UH852166	3	NUT M16 GALV	NYLOCKMUTTER M16 ELZN.	
22	UH410334	3	WASHER Ø17-Ø43X5 SPECIAL	BRIKKE Ø17-Ø43X5 SPESIAL	
23	UH441415	3	SQUARE WASHER 45 Ø17X8	FIRKANTBRIKKE 45 Ø17X8	
	-				
25	UH442958	1	STAY	FESTESTANG SV.	
26	UH442977	1	WASHER	FESTEBRIKKE	
27	UH442978	1	STAY Ø5X300	STANG Ø5X300	
28	UH813416	1	HEX. BOLT M8X16-8.8 GALV.	SEKSKANTSKRUE M8X16-8.8 ELZN	
30	UH228577	2	WASHER Ø13.5-Ø35X5	BRIKKE Ø13.5-Ø35X5	
30	UH852162	2	NYLOCK NUT M12 GALV	NYLOCKMUTTER M12 ELZN.	
32	UH231499	2	WASHER Ø11-Ø22X5	BRIKKE Ø11-Ø22X5 ELZN	
35	UH441052	1	SWITCH FOR EMERGENCY STOP	BRYTER FOR NØDSTOPP KPL	
36	UH314313	1	PLUG PE11	TETNINGSPLUGG PE11	

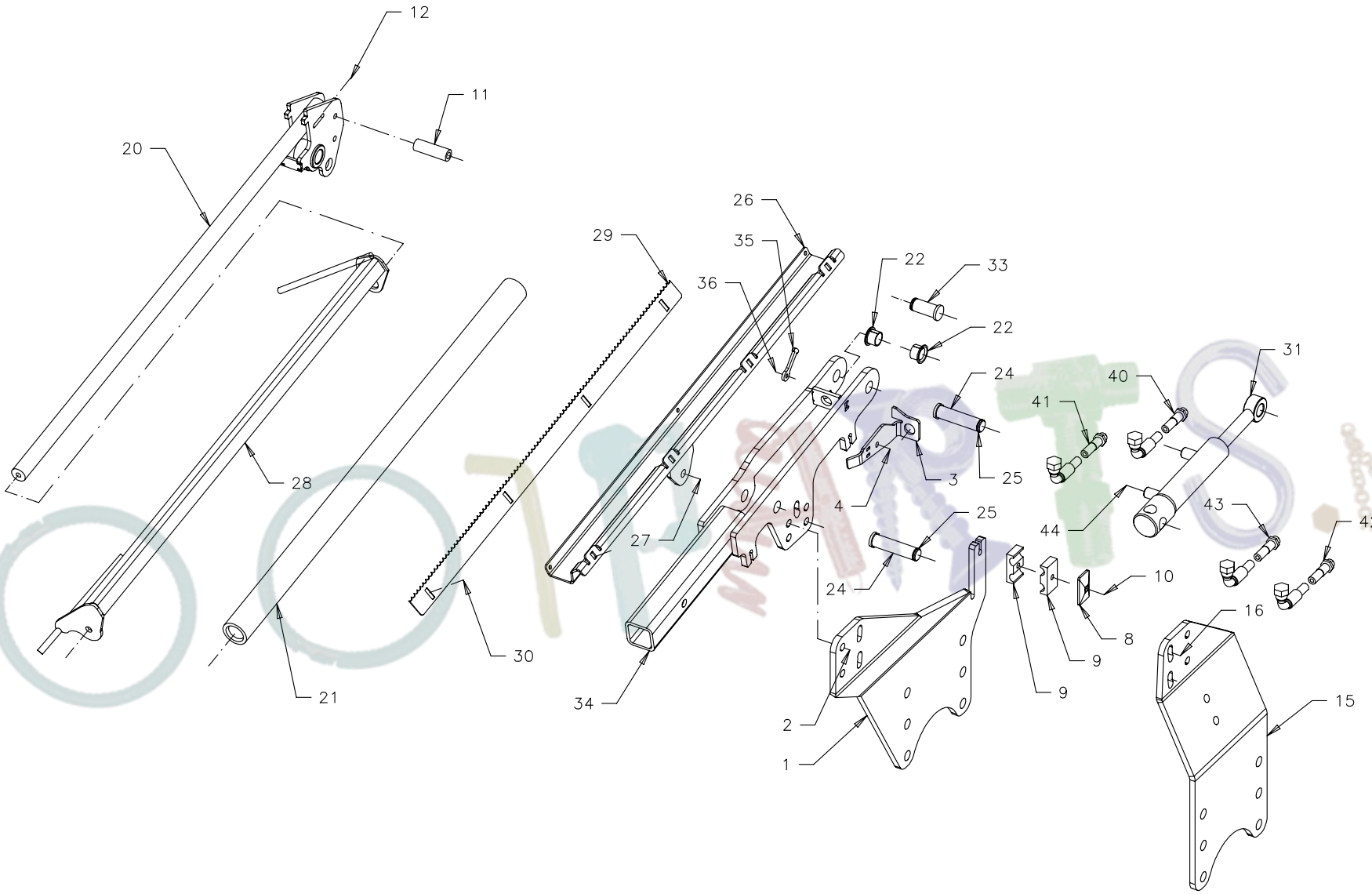

re443230-1

Fig: 9

Page issue: / Sideutgave:	01	Implement: / Redskap:	7664	Big bale wrapper / Storballepakker
Date: / Dato:	1102	Unit: / Enhet:	Applicutter / Filmkutter	Fig. no: / Fig. nr: 9

No. / Ref.	Part no. / Delenr.	Qty. / Ant.	Description	Beskrivelse	Note / Anm.
1-12	UH443230		CUTTER COMPACT LEFT ASSY 7650	KUTTER KOMPAKT V. KOMPL. 7650	
1	UH443231	1	BRACKET CUTTER LEFT 7655	BRAKETT KUTTER VENSTRE 7655	
2	UH813635	2	HEX. BOLT M12X35-8.8 GALV	SEKSKANTSKRUE M12X35-8.8 ELZN	
2	UH860163	2	WASHER Ø13-Ø24X2.5	BRIKKE Ø13-Ø24X2.5 ELZN	
2	UH852162	2	NYLOCK NUT M12 GALV	NYLOCKMUTTER M12 ELZN.	
3	UH443232	1	BRACKET SENSOR CUTTER OPEN	BRAKETT SENSOR KUTTER ÅPEN	
4	UH813430	1	HEX. BOLT M8X30-8.8 GALV.	SEKSKANTSKRUE M8X30-8.8 ELZN	
4	UH860158	2	WASHER Ø8.4-Ø17X1.6	BRIKKE Ø8.4-Ø17X1.6 ELZN	
4	UH852158	1	NYLOCK NUT M8 GALV.	NYLOCKMUTTER M8 ELZN.	
5	UH256454	1	SPACER Ø14.9-Ø21.3X52	HYLSE Ø14.9-Ø21.3X52	
6	UH821470	1	CARRIAGE BOLT M8X70-4.6 GALV.	LÅSESKRUE M8X70-4.6 ELZN.	
6	UH860158	1	WASHER Ø8.4-Ø17X1.6	BRIKKE Ø8.4-Ø17X1.6 ELZN	
6	UH850158	1	HEX. NUT M8-8 GALV.	SEKSKANTMUTTER M8-8 ELZN.	
8	UH300887	1	PLATE 6-12 DOUBLE	TOPPLATE 6-12 DOBBEL	
9	UH300878	2	TUBE CLAMP HALF Ø15 DOUBLE	RØRKLAMMERHALVDEL Ø15 DOBBEL	
10	UH813450	1	HEX. BOLT M8X50-8.8 GALV.	SEKSKANTSKRUE M8X50-8.8 ELZN	
10	UH860158	1	WASHER Ø8.4-Ø17X1.6	BRIKKE Ø8.4-Ø17X1.6 ELZN	
10	UH852158	1	NYLOCK NUT M8 GALV.	NYLOCKMUTTER M8 ELZN.	
11	UH258923	1	COLLAR Ø9-Ø20X40	HYLSE Ø9-Ø20X40	
12	UH813460	1	HEX. BOLT M8X60-8.8 GALV	SEKSKANTSKRUE M8X60-8.8 ELZN	
12	UH860158	1	WASHER Ø8.4-Ø17X1.6	BRIKKE Ø8.4-Ø17X1.6 ELZN	
12	UH852158	1	NYLOCK NUT M8 GALV.	NYLOCKMUTTER M8 ELZN.	
15-16	UH443237		CUTTER COMPACT RIGHT ASSY 7650	KUTTER KOMPAKT H. KOMPL. 7650	
15	UH443236	1	BRACKET CUTTER RIGHT 7655	BRAKETT KUTTER HØYRE 7655	
16	UH813635	2	HEX. BOLT M12X35-8.8 GALV	SEKSKANTSKRUE M12X35-8.8 ELZN	
16	UH860163	2	WASHER Ø13-Ø24X2.5	BRIKKE Ø13-Ø24X2.5 ELZN	
16	UH852162	0	NYLOCK NUT M12 GALV	NYLOCKMUTTER M12 ELZN.	
20-36	UH443260		APPLI CUTTER ASSY	FILMKUTTER KOMPL.	
20	UH443275	1	ARM	ARM SV.	
21	UH450985	1	RUBBER TUBE ASSY	GUMMIRØR KOMPL.	
22	UH450312	2	SLIDING BEARING W/FLANGE 2016.5	GLIDELAGER M/FLENS 2016.5	
23	UH813520	1	HEX. BOLT M10X20-8.8 GALV.	SEKSKANTSKRUE M10X20-8.8 ELZN	
23	UH860160	1	WASHER Ø10.5-Ø21X2	BRIKKE Ø10.5-Ø21X2 ELZN	
24	UH450416	2	HEADED PIN Ø20X75	SPORBOLT M/HODE Ø20X75	
25	UH860170	2	WASHER Ø21-Ø37X3	BRIKKE Ø21-Ø37X3 ELZN	
25	UH868420	2	CIRCLIP A20X1.2	LÅSERING UTV. A20X1.2	
26	UH450968	1	KNIFE BRACKET	KNIVHOLDER SV.	
27	UH813680	1	HEX. BOLT M12X80-8.8 GALV	SEKSKANTSKRUE M12X80-8.8 ELZN	
27	UH860163	2	WASHER Ø13-Ø24X2.5	BRIKKE Ø13-Ø24X2.5 ELZN	
27	UH852162	1	NYLOCK NUT M12 GALV	NYLOCKMUTTER M12 ELZN.	
28	UH443270	1	HOOP	SIKKERHETSBØYLE SV.	
29	UH450988	1	KNIFE	KUTTERBLAD	
30	UH821316	4	CARRIAGE BOLT M6X16-4.6 GALV.	LÅSESKRUE M6X16-4.6 ELZN.	
30	UH860158	4	WASHER Ø8.4-Ø17X1.6	BRIKKE Ø8.4-Ø17X1.6 ELZN	
30	UH852156	4	NYLOCK NUT M6 GALV.	NYLOCKMUTTER M6 ELZN.	
31	UH443280	1	CYLINDER DA Ø32-Ø20X240+80	SYLINDER DV Ø32-Ø20X240+80	

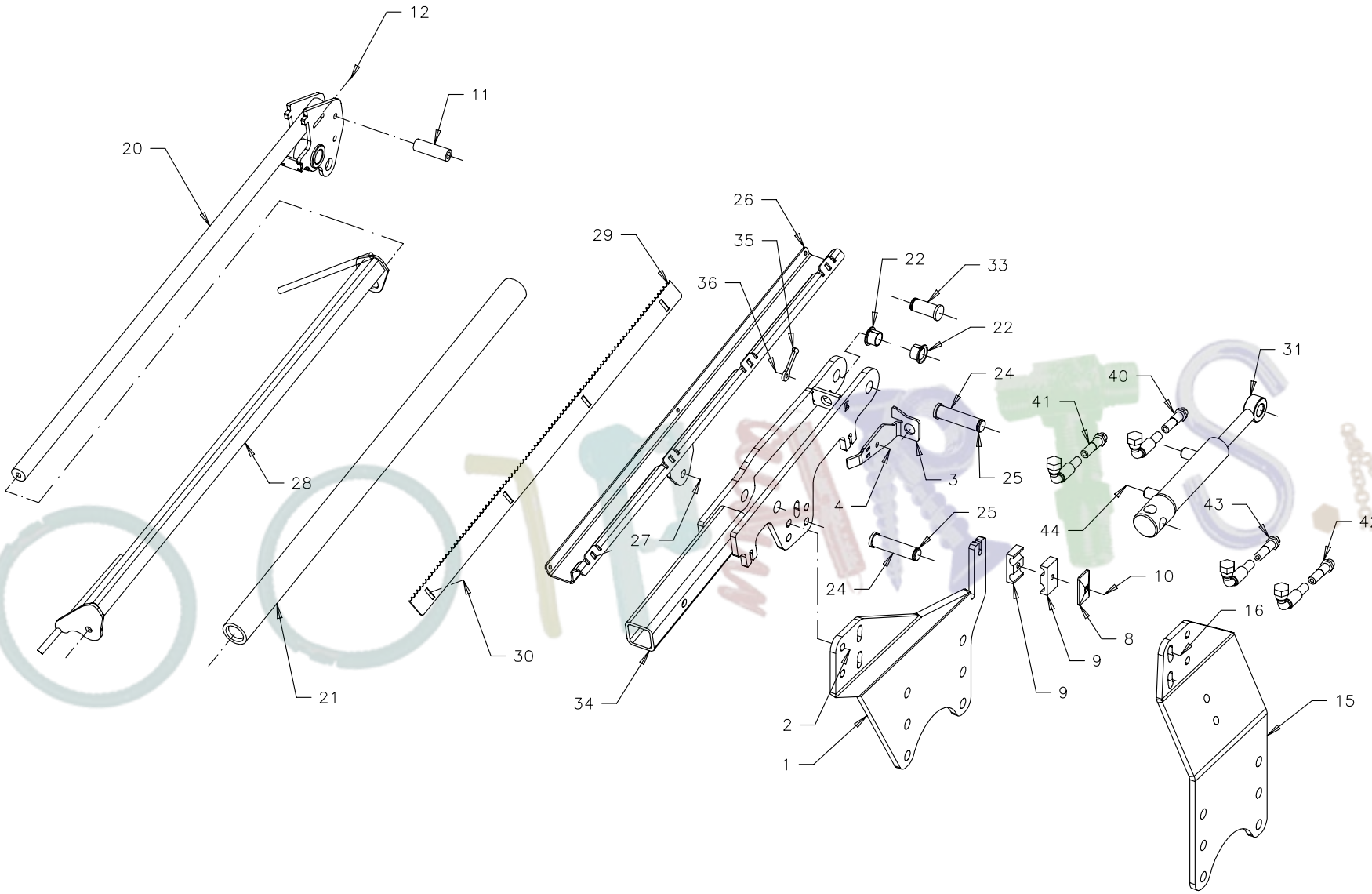

re443230-1

Fig: 9

Page issue: / Sideutgave:	01	Implement: / Redskap:	7664	Big bale wrapper / Storballepakker	
Date: / Dato:	1102	Unit: / Enhet:	Applicutter / Filmkutter		Fig. no: / Fig. nr: 9

No. / Ref.	Part no. / Delenr.	Qty. / Ant.	Description	Beskrivelse	Note / Anm.
*	UH218027		CYLINDER SEAL KIT Ø32/Ø20	SYLINDERPAKNINGSSETT Ø32/Ø20	
32	UH300953	2	RESTRICTOR M8 Ø1.0 MM	STRUPENIPPEL M8 Ø1,0 MM	
33	UH450415	1	HEADED PIN Ø20X40	SPORBOLT M/HODE Ø20X40	
33	UH860170	1	WASHER Ø21-Ø37X3	BRIKKE Ø21-Ø37X3 ELZN	
33	UH868420	1	CIRCLIP A20X1.2	LÅSERING UTV. A20X1.2	
34	UH443265	1	FILM CUTTER FRAME	HOLDER SV.	
35	UH443289	1	PLATE	PLATE	
36	UH821325	1	CARRIAGE BOLT M6X25-4.6 GALV.	LÅSESKRUE M6X25-4.6 ELZN.	
36	UH852156	1	NYLOCK NUT M6 GALV.	NYLOCKMUTTER M6 ELZN.	
36	UH860156	1	WASHER Ø6.6-Ø12X1.5	BRIKKE Ø6.6-Ø12X1.5 ELZN	
	-				
40	UH443247	1	HYDR.HOSE 1/4" 850 S12I06-90°	HYDR.SL. 1/4" 850 S12I06-90G	Left
41	UH443248	1	HYDR.HOSE. 1/4" 990 S12I06-90°	HYDR.SL. 1/4" 990 S12I06-90G	Left
42	UH443245	1	HYDR.HOSE 1/4" 660 S12I06-90°	HYDR.SL.1/4" 660 S12I06-90G	Right
43	UH443246	1	HYDR.HOSE. 1/4" 770 S12I06-90°	HYDR.SL. 1/4" 770 S12I06-90G	Right
44	UH313750	4	RESTRICTOR M8 Ø0,8 MM	STRUPENIPPEL M8 Ø0.8 MM	

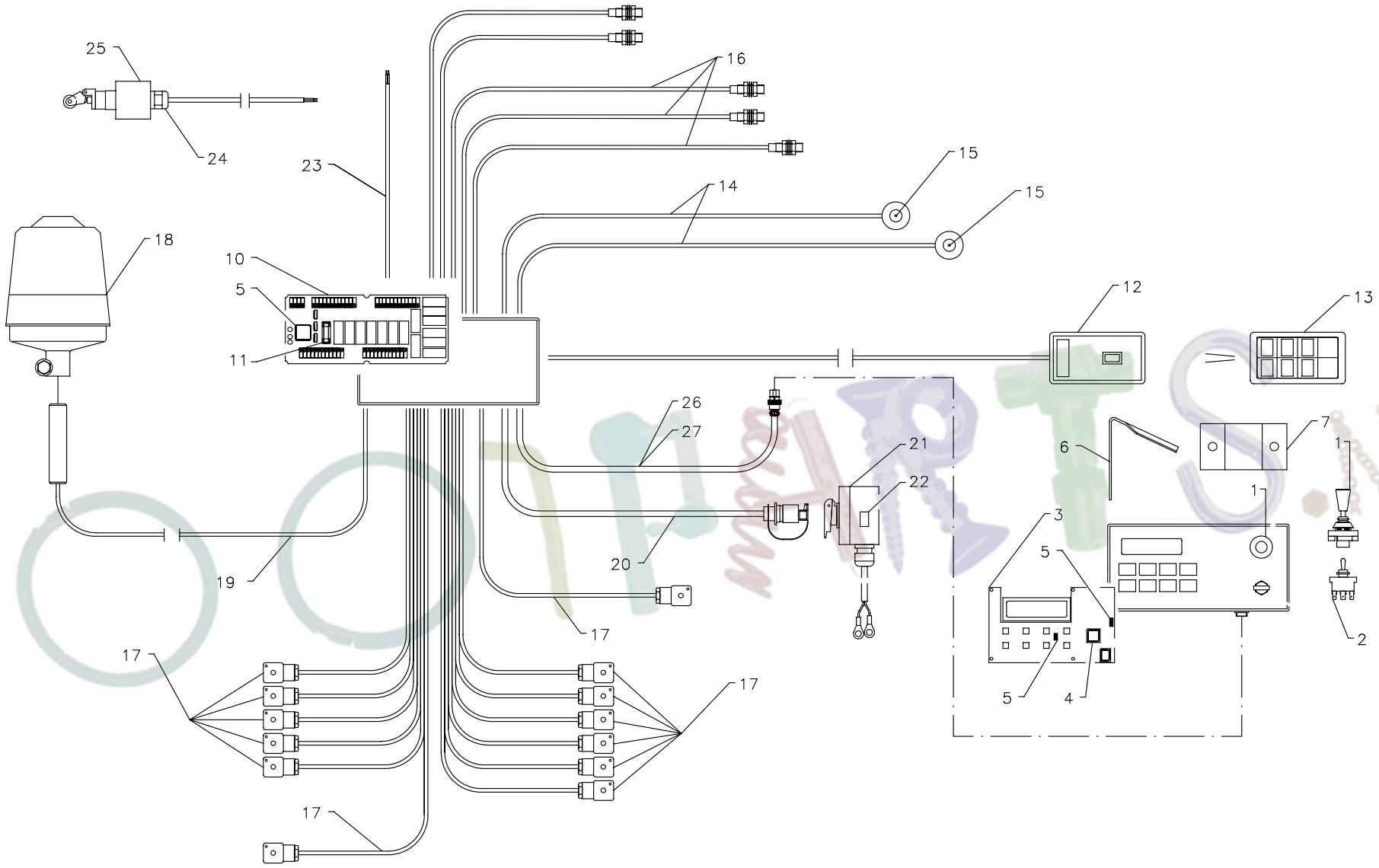
25
24
23
16
15
15
14
18
10
5
11
12
13
26
27
21
22
6
7
1
1
3
5
20
19
17
17
17
5
4
2
RE441050-1

Fig: 10

Page issue: / Sideutgave:	01	Implement: / Redskap:	7664	Big bale wrapper / Storballepakker	
Date: / Dato:	1102	Unit: / Enhet:	Electrical controller / Elektrisk styring		Fig. no: / Fig. nr: 10

No. / Ref.	Part no. / Delenr.	Qty. / Ant.	Description	Beskrivelse	Note / Anm.
1-7	UH441071		CONTROL PANEL 7655	STYREPANEL 7655 (1996-)	
1	UH309532	1	JOYSTICK OTEHALL	JOYSTICK OTEHALL	
2	UH441252	1	TOGGLE-SWITCH	VIPPEBRYTER	
3	UH441082	1	PRINT CARD FOR CONTROL PANEL UH441071	PRINTKORT FOR STYREPANEL UH441071	
	-				
4	UH441256	1	PROGRAMME CHIP KIT 7655 USE UH441257	PROGRAMBRIKKE-SETT 7655 VER. 2.20	
	-				
5	UH441254	1	CHIP SET COMMUNICATION 7655	CHIP SETT KOMMUNIKASJON 7655	
	-				
6	UH413006	1	BRACKET CONTROLBOX	HOLDER STYREBOKS	
7	UH309546	1	CONTROL UNIT BRACKET	FESTE FOR BETJENINGSORGAN	
	-				
10	UH441080	1	DRIVERCARD 7655	DRIVERKORT 7655	
ut	-				
11	UH440468	1	FUSE T 10-15A	SIKRING T 10-15A	
12	UH441085	1	SENSOR INFRAEYE ASSY	SENSOR INFRAØYE KOMPL.	
	-				
13	UH441086	1	REMOTE CONTROL	FJERNBETJENING PANEL	
	-				
14	UH441065	2	ANALOGUE SENSOR W/WIRE AND CONNECTORS	ANALOG SENSOR M/LEDNING OG KONTAKTER	EXTRA
15	UH441122	2	TRANSMISSION	MEDBRINGERSKRUE KPL.	
16	UH441060	5	SENSOR WITH WIRE	SENSOR M/LEDNING	
17	UH441070	12	VALVE CABLE W/DIODE	VENTILKABEL M/DIODE	
18	UH412186	1	WARNING BEACON	ROTERENDE VARSELLAMPE	
19	UH440487	1	LAMP CABLE ASSY	LAMPE KABEL KPL	
20	UH322820	1	POWER SUPPLY CABLE 8M ASSY.	STRØMFORS.KABEL 8M KPL. ERST. AV 322815	
21	UH322821	1	BATTERYCABEL W/CONN.BOX ASSY	BATTERIK. M/K.BOKS KPL. ERST. AV 322814	
22	UH440493	1	FUSE T. 15A	SIKRING T. 15A	
23	UH440488	1	SATELLITE CABLE	KABEL SATELITT	
24	UH441052	1	SWITCH FOR EMERGENCY STOP	BRYTER FOR NØDSTOPP KPL	
25	UH302224	3	PACKING NIPPLE PG 11	PAKKNIPPEL PG 11	
26	UH441077	1	COMPUTERCABLE 9M	DATAKABEL 9M KOMPL.	
27	UH441075	1	COMPUTERCABLE 6M ASSY	DATAKABEL 6M KOMPL.	EXTRA

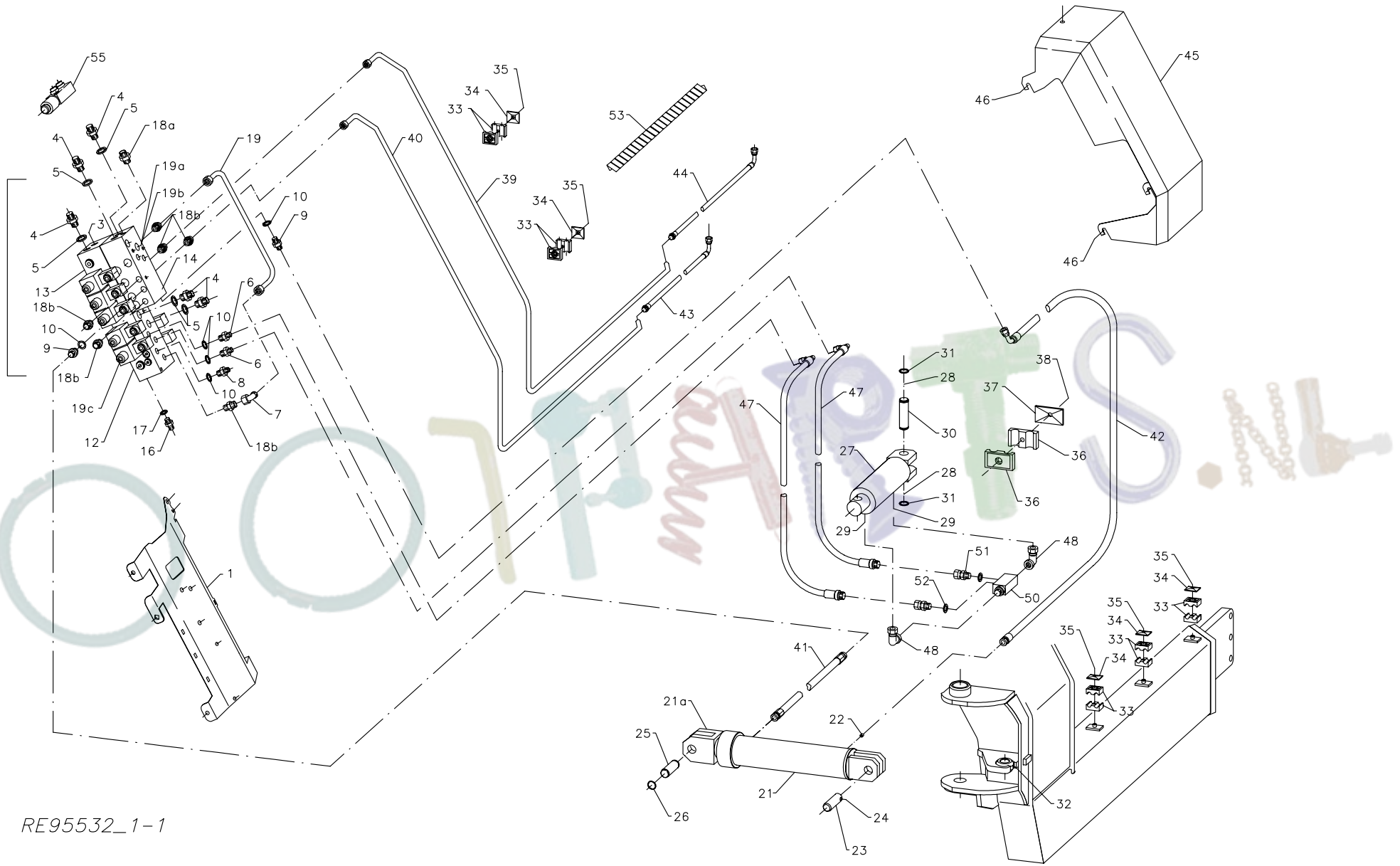

Fig: 11

Page issue: / Sideutgave:	01	Implement: / Redskap:	7664	Big bale wrapper / Storballepakker
Date: / Dato:	1102	Unit: / Enhet:	Hydraulics / Hydraulikk	Fig. no: / Fig. nr: 11

No. / Ref.	Part no. / Delenr.	Qty. / Ant.	Description	Beskrivelse	Note / Anm.
1	UH440867	1	PLATE	FESTEPLATE	
2	UH813506	1	HEX. BOLT M8X160-8.8 ELZN	SEKSKANTSKRUE M8X160-8.8 ELZN	
2	UH860158	6	WASHER Ø8.4-Ø17X1.6	BRIKKE Ø8.4-Ø17X1.6 ELZN	
2	UH852158	3	NYLOCK NUT M8 GALV.	NYLOCKMUTTER M8 ELZN.	
3	UH410742	1	ADAPTOR Ø15-1/2"	RETT NIPPEL Ø15-1/2" GULK.	
4	UH300971	5	HEXAGON NIPPLE 1/2"-1/2" BSP	ANSATS 1/2"-1/2" BSP UU	
5	UH219669	5	SEAL 1/2" PP 45-D	PAKNINGSRING 1/2" BOND SEAL	
6	UH300972	2	ADAPTOR R1/4"-R3/8"	ANSATS 1/4"-3/8" BSP UU	
7	UH300964	1	JUNCTION EVW Ø12-Ø12	ALBU EVW Ø12-Ø12	
8	UH410747	1	MALE ADAPTOR 3/8"-1/2"	ANSATS 3/8"-1/2" BSP UU	
9	UH410748	2	NIPPLE 3/8"-3/8"	ANSATS 3/8"-3/8" BSP UU	
10	UH410746	5	BOND SEAL 3/8"	PAKNINGSRING 3/8" BOND SEAL	
	-				
11a	UH441226	1	VALVE BANK 6 SP. ASSY. F/DBL SATELLITE	HYDR.SENTRAL 6 SL. KOMPL. F/DOB. SAT.	
12a	UH441227	1	VALVE SECTION 2 SP. F/DOUBLE SATELLITE	VENTILBLOKK 2 SL. F/DOBBEL SATELLITT	
13	UH440854	1	VALVE SECTION 4 SPOOLS	VENTILBLOKK 4 SLEIDER	
14a	UH441183	1	VALVE SECTION F/DOUBLE SATELLITE	VENTILHUS F/DOBBEL SATELLITT	
15	UH813490	2	HEX. BOLT M8X90-8.8 GALV.	SEKSKANTSKRUE M8X90-8.8 ELZN	
15	UH860158	4	WASHER Ø8.4-Ø17X1.6	BRIKKE Ø8.4-Ø17X1.6 ELZN	
15	UH852158	2	NYLOCK NUT M8 GALV.	NYLOCKMUTTER M8 ELZN.	
16	UH300957	1	NIPPLE R1/4"-R1/4"	ANSATS 1/4"-1/4" BSP UU	
17	UH300966	1	SEAL 1/4"	PAKNINGSRING 1/4" BOND SEAL	
18a	UH440856	1	RETT NIPPEL Ø15-3/8" GULK.	RETT NIPPEL Ø15-3/8" GULK.	
18b	UH410741	6	NIPPLE Ø12-3/8"	RETT NIPPEL Ø12-3/8" GULK.	
19	UH440873	1	HYDR. RØR 12MM	HYDR. RØR 12MM	
19a	UH441042	1	PLUG BYPASS	BLINDPLUGG BYPASS	
19b	UH441041	1	BYPASS VALVE	BYPASS-VENTIL	
20	UH813535	4	HEX. BOLT M10X35-8.8 GALV.	SEKSKANTSKRUE M10X35-8.8 ELZN	
20	UH860160	4	WASHER Ø10.5-Ø21X2	BRIKKE Ø10.5-Ø21X2 ELZN	
20	UH850160	4	HEX. NUT M10-8 GALV.	SEKSKANTMUTTER M10-8 ELZN.	
21	UH440010	2	CYLINDER DA Ø75/Ø36X500+230	SYLINDER DV Ø75/Ø36X500+230	ARMS
21a	UH410797	2	PISTON ROD	STEMPELSTANG	ARMS
*	UH411171		CYLINDER SEAL KIT Ø75/Ø36	SYLINDERPAKNINGSSETT Ø75/Ø36	
22	UH440084	1	RESTRICTOR M8 Ø3 MM	STRUPENIPPEL M8 Ø3 MM	
23	UH419010	2	AXEL 25X92 7720	AKSEL Ø25X92-Ø10/79	
24	UH865563	2	SPLIT PIN 10 X 63	SPLINT 10X63 GALV.	
25	UH410635	2	CYLINDER PIN Ø25X71.5	SPORBOLT Ø25X71.5 EL.GALV	
26	UH868719	4	CIRCLIP "E"-TYPE 19	SPORRYTTER 19	
	-				
27	UH410714	1	CYLINDER DV Ø70/045X352+150	SYLINDER DV Ø70/Ø45X352+150	DRAWBAR
*	UH411170		CYLINDER SEAL KIT Ø70/Ø45	SYLINDERPAKNINGSSETT Ø70/Ø45	
28	UH860175	2	WASHER Ø25.3-Ø44X4	UNDERLAGSSKIVE Ø25.3-Ø44X4	
29	UH441142	2	RESTRICTOR M8 Ø1.2 MM	STRUPENIPPEL M8 Ø1.2 MM	
30	UH410635	1	CYLINDER PIN Ø25X71.5	SPORBOLT Ø25X71.5 EL.GALV	
31	UH868719	2	CIRCLIP "E"-TYPE 19	SPORRYTTER 19	
32	UH873540	1	GREASE NIPPLE M6 STRAIGHT	SMØRENIPPEL M6 RETT	

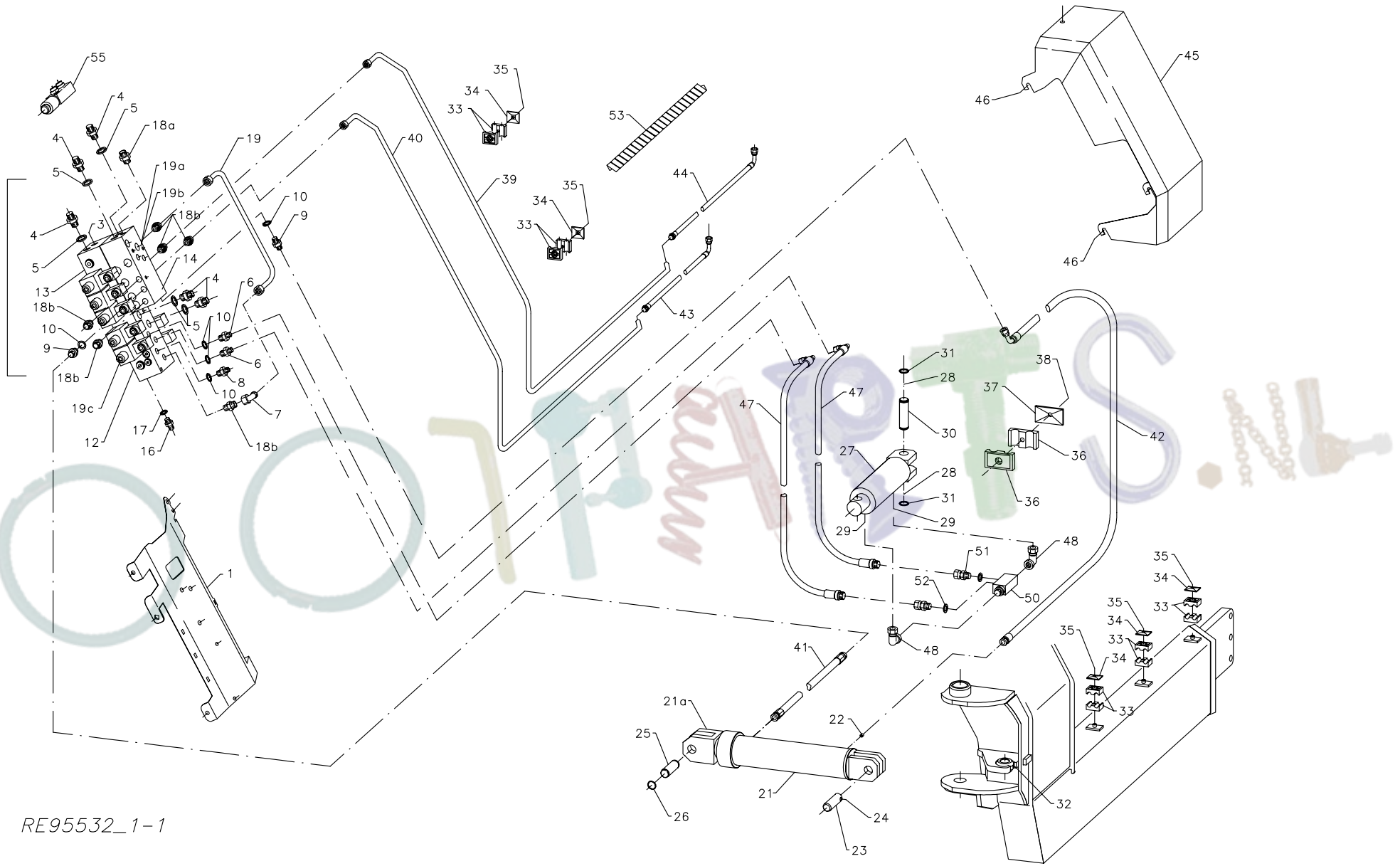

Fig: 11

Page issue: / Sideutgave:	01	Implement: / Redskap:	7664	Big bale wrapper / Storballepakker
Date: / Dato:	1102	Unit: / Enhet:	Hydraulics / Hydraulikk	Fig. no: / Fig. nr: 11

No. / Ref.	Part no. / Delenr.	Qty. / Ant.	Description	Beskrivelse	Note / Anm.
33	UH300874	10	TUBE CLAMP HALF Ø22 DOUBLE	RØRKLAMMERHALVDEL Ø12 DOBBEL	
34	UH300887	5	PLATE 6-12 DOUBLE	TOPPLATE 6-12 DOBBEL	
35	UH813375	5	HEX. BOLT M6X75-8.8 GALV.	SEKSKANTSKRUE M6X75-8.8 ELZN	
35	UH852156	2	NYLOCK NUT M6 GALV.	NYLOCKMUTTER M6 ELZN.	
35	UH813335	6	HEX.BOLT M6X35-8.8 ELZN	SEKSKANTSKRUE M6X35-8.8 ELZN	
36	UH300883	2	TUBE CLAMP HALF Ø20 DOUBLE	RØRKLAMMERHALVDEL Ø20 DOBBEL	
36a	UH300878	6	TUBE CLAMP HALF Ø15 DOUBLE	RØRKLAMMERHALVDEL Ø15 DOBBEL	
37	UH300886	1	PLATE 20-25	TOPPLATE 20-25 DOBBEL	
37a	UH300885	1	PLATE 14-18 DOUBLE	TOPPLATE 14-18 DOBBEL	
38	UH813435	1	HEX. BOLT M8X35-8.8 GALV.	SEKSKANTSKRUE M8X35-8.8 ELZN	
39	UH440871	1	HYDR. RØR 12MM	HYDR. RØR 12MM	
40	UH440872	1	HYDR. RØR 12MM	HYDR. RØR 12MM	
41	UH440863	1	HYDRAULIC HOSE 3/8" 1780 I06I06-0G	HYD.SL.3/8" 1780 I06I06-0G	
42	UH440864	1	HYDRAULIC HOSE 3/8" 1190 I06I06-90DEG	HYD.SL.3/8" 1190 I06I06-90G	
43	UH440876	1	HYD.SL.1/4" 600 S12I06-90G	HYD.SL.1/4" 600 S12I06-90G	
44	UH440877	1	HYDR. HOSE 800 S12I06-90DEG.	HYD.SL.1/4" 800 S12I06-90G	
45	UH441105	1	COVER	DEKSEL SV	
46	UH850160	4	HEX. NUT M10-8 GALV.	SEKSKANTMUTTER M10-8 ELZN.	
46	UH855380	4	HANDWHEEL M10	STJERNERATT M10	
47	UH440861	2	HYD.SL.1/4" 1200 U06I04-90G	HYD.SL.1/4" 1200 U06I04-90G	
48	UH440855	2	JUNCTION 3/8" BSP II COMPACT	ALBU 90GRD 3/8" BSP II KOMPAKT	
50	UH440860	1	DOUBLE ACTING LOCK VALVE	DOBBEL LÅSEVENTIL	
51	UH410785	2	FIRM SWIVEL 3/8" BSP	ANSATS 3/8"-3/8" BSP UI	
52	UH410746	2	BOND SEAL 3/8"	PAKNINGSRING 3/8" BOND SEAL	
53	UH440093	1	PROTECTION SPIRAL	BESKYTTELSESSPIRAL Ø28X700	
55	UH441040	1	LOADING VALVE DOUBLE SATELLITE	OPPLASTINGSVENTIL DOBBEL SATELLITT	

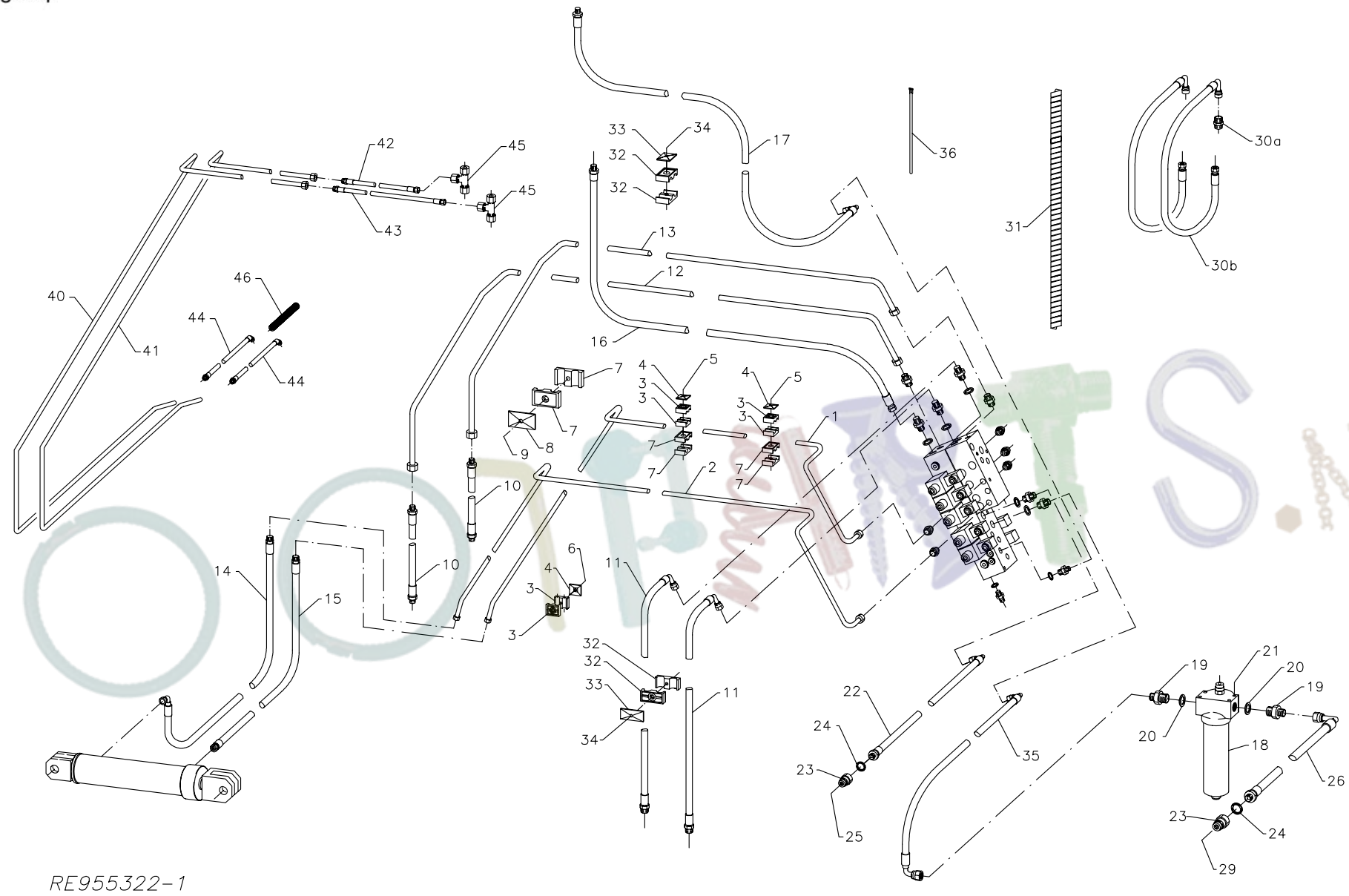

Fig: 12

Page issue: / Sideutgave:	01	Implement: / Redskap:	7664	Big bale wrapper / Storballepakker
Date: / Dato:	1102	Unit: / Enhet:	Hydraulics / Hydraulikk	Fig. no: / Fig. nr: 12

No. / Ref.	Part no. / Delenr.	Qty. / Ant.	Description	Beskrivelse	Note / Anm.
1	UH440874	1	HYDR. RØR 12MM	HYDR. RØR 12MM	
2	UH440875	1	HYDR. RØR 12MM	HYDR. RØR 12MM	
3	UH300874	6	TUBE CLAMP HALF Ø22 DOUBLE	RØRKLAMMERHALVDEL Ø12 DOBBEL	
4	UH300887	3	PLATE 6-12 DOUBLE	TOPPLATE 6-12 DOBBEL	
5	UH813375	2	HEX. BOLT M6X75-8.8 GALV.	SEKSKANTSKRUE M6X75-8.8 ELZN	
5	UH852156	2	NYLOCK NUT M6 GALV.	NYLOCKMUTTER M6 ELZN.	
6	UH813335	1	HEX.BOLT M6X35-8.8 ELZN	SEKSKANTSKRUE M6X35-8.8 ELZN	
7	UH300878	6	TUBE CLAMP HALF Ø15 DOUBLE	RØRKLAMMERHALVDEL Ø15 DOBBEL	
8	UH300885	1	PLATE 14-18 DOUBLE	TOPPLATE 14-18 DOBBEL	
9	UH813435	1	HEX. BOLT M8X35-8.8 GALV.	SEKSKANTSKRUE M8X35-8.8 ELZN	
9	UH852158	1	NYLOCK NUT M8 GALV.	NYLOCKMUTTER M8 ELZN.	
10	UH440072	2	HYDRAULIC HOSE 1/2" 510 S15S15-0G	HYD.SL.1/2" 510 S15S15-0G	
11	UH440866	2	HYDR. HOSE 1/2" 1200 U06I04-90°	HYDR.SLANGE 1/2" 1200 U06I04-90°	
12	UH440869	1	HYDR. RØR 15MM	HYDR. RØR 15MM	
13	UH440870	1	HYDR. RØR 15MM	HYDR. RØR 15MM	
14	UH440865	1	HYDRAULIC HOSE 3/8" 570 S12I06-90G	HYD.SL.3/8" 570 S12I06-90G	
15	UH440879	1	HYDRAULIC HOSE 3/8" 630 S12I06-0G	HYD.SL.3/8" 630 S12I06-0G	
16	UH440862	1	HYDRAULIC HOSE 1/2" 1120 I08S15-0G	HYD.SL.1/2" 1120 I08S15-0G	
17	UH440059	1	HYDR. HOSE 1/2" 1700	HYD.SL.1/2" 1700 S15I08-90G	
	-				
18	UH306684	1	PRESSURE FILTER PARKER 12M-1	TRYKKFILTER PARKER 12M-1	
*	UH306685		FILTER ELEMENT PARKER	FILTERELEMENT PARKER	
19	UH306756	2	ADAPTOR 1/2-3/4	ANSATS 1/2"-3/4" BSP UU	
20	UH306757	2	BOND SEAL 3/4"	PAKNINGSRING 3/4" BOND SEAL	
21	UH813416	4	HEX. BOLT M8X16-8.8 GALV.	SEKSKANTSKRUE M8X16-8.8 ELZN	
21	UH860158	4	WASHER Ø8.4-Ø17X1.6	BRIKKE Ø8.4-Ø17X1.6 ELZN	
22	UH440056	1	HYDR. HOSE 1/2" 3400	HYD.SL.1/2" 3650 U08I08-90G	
23	UH313882	2	QUICK RELEASE COUPLING R1/2" MALE	HURTIGKOPLING M/TAPP 1/2" HAN	
24	UH219669	2	SEAL 1/2" PP 45-D	PAKNINGSRING 1/2" BOND SEAL	
25	UH410724	1	DUST CAP BLUE	STØVBESKYTTER BLÅ	
26	UH440061	1	HYDR. HOSE 1/2" 3300	HYD.SL.1/2" 3300 U08I08-90G	
29	UH410723	1	DUST CAP YELLOW	STØVBESKYTTER GUL	
	-				
30a	UH440888	4	COUPLING G-15-L	SKJØTEKUPLING RETT G-15-L	
30b	UH440878	4	HYDRAULIC HOSE 1/2" 1000S15-90G-I08-90	HYD.SL.1/2" 1000S15-90G-I08-90	
31	UH440093	1	PROTECTION SPIRAL	BESKYTTELSESSPIRAL Ø28X700	
32	UH300877	8	TUBE CLAMP HALF Ø22 DOUBLE	RØRKLAMMERHALVDEL Ø22 DOBBEL	
33	UH300886	4	PLATE 20-25	TOPPLATE 20-25 DOBBEL	
34	UH813445	1	HEX. BOLT M8X45-8.8 GALV.	SEKSKANTSKRUE M8X45-8.8 ELZN	
34	UH813470	3	HEX. BOLT M8X70-8.8 GALV.	SEKSKANTSKRUE M8X70-8.8 ELZN	
34	UH852158	3	NYLOCK NUT M8 GALV.	NYLOCKMUTTER M8 ELZN.	

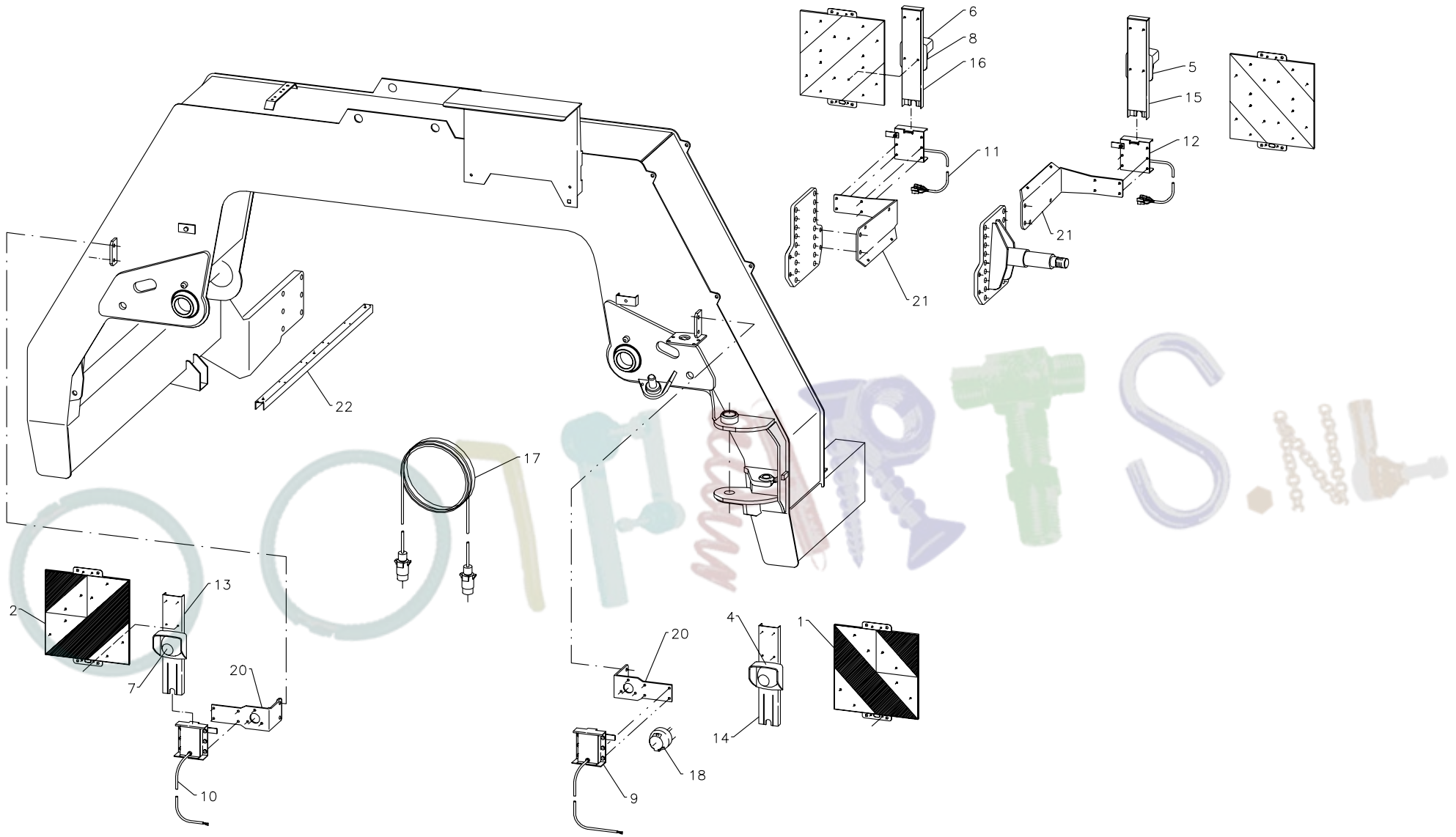

Fig: 13

Page issue: / Sideutgave:	01	Implement: / Redskap:	7664	Big bale wrapper / Storballepakker
Date: / Dato:	1102	Unit: / Enhet:	Light equipment / Lysutstyr	Fig. no: / Fig. nr: 13

No. / Ref.	Part no. / Delenr.	Qty. / Ant.	Description	Beskrivelse	Note / Anm.
1	UH440983	1	REFLEXPLATE RIGHT	REFLEKSPLATE HØYRE	
2	UH440986	1	REFLEXPLATE LEFT	REFLEKSPLATE VENSTRE	
4	UH440987	1	POSITIONLAMP FRONT	FRAMLYKT	
5	UH440988	1	FLASHLIGHT REAR LEFT GEKA	BLINKLYKT BAK VENSTRE GEKA	
6	UH440989	1	FLASHLIGHT BACK RIGHT	BLINKLYKT BAK HØYRE GEKA	
7	UH440984	1	LAMP LENS FRONT	LYKTEGLAS FORAN	
8	UH440985	1	LAMP LENS BACK	LYKTEGLASS BAK	
9	UH440776	1	LIGHT BRACKET RH FRONT	STIKKBOKS H. FORAN	
10	UH440777	1	LIGHT BRACKET LH FRONT	STIKKBOKS V. FORAN	
11	UH440778	1	LIGHT BRACKET RH REAR	STIKKBOKS H. BAK	
12	UH440779	1	LIGHT BRACKET LH REAR	STIKKBOKS V. BAK	
17	UH440775	1	CONNECTING WIRE TRACTOR	KABEL MED STØPSEL (012503)	
18	UH440780	1	7 PIN PLUG (SEAL INCLUDED)	KONTAKT 7 POLET (MED PAKNING)	
	-				
20	UH440772	2	ARM FRONT	FESTEVINKEL FORAN	
21	UH440773	2	ARM BACK	FESTEVINKEL BAK	
22	UH440774	1	CABLE PROFILE	FESTESKINNE LEDNING LYSUTSTYR.	

Numerical parts index/Numerisk deleregister

Part no. / Dele nr.	Fig./Ref. / Fig./Ref.	Part no. / Dele nr.	Fig./Ref. / Fig./Ref.	Part no. / Dele nr.	Fig./Ref. / Fig./Ref.	Part no. / Dele nr.	Fig./Ref. / Fig./Ref.	Part no. / Dele nr.	Fig./Ref. / Fig./Ref.
UH204501	4 / *	UH300971	5 / 9	UH410958	4 / 14	UH440394	3 / 34	UH440790	1 / 50
UH204532	4 / *	UH300972	11 / 6	UH410958	2 / 23	UH440395	3 / 35	UH440831	5 / 12
UH214263	4 / 35	UH300974	5 / 12c	UH411170	11 / *	UH440397	2 / 14-16	UH440836	5 / 12a
UH215069	6 / 76	UH302224	10 / 25	UH411171	11 / *	UH440398	2 / 14	UH440854	11 / 13
UH215888	1 / 11	UH303728	4 / 48	UH411320	1 / 19	UH440399	2 / 15	UH440855	11 / 48
UH217676	1 / 44	UH306684	12 / 18	UH411722	2 / 57	UH440418	2 / 2	UH440856	11 / 18a
UH218027	9 / *	UH306685	12 / *	UH412186	10 / 18	UH440421	4 / 10	UH440857	4 / 18
UH219669	5 / 17	UH306756	12 / 19	UH412611	1 / 12	UH440422	4 / 11	UH440859	5 / 7b
UH219669	5 / 8	UH306757	12 / 20	UH412615	1 / 4	UH440425	4 / 2a	UH440859	7 / 28
UH219669	11 / 5	UH309532	10 / 1	UH412620	1 / 10-14	UH440426	4 / 2b	UH440860	11 / 50
UH219669	12 / 24	UH309546	10 / 7	UH412631	1 / 36	UH440432	4 / 15	UH440861	11 / 47
UH219669	4 / 19	UH313334	4 / 51	UH412631	1 / 10	UH440435	2 / 4-6	UH440862	12 / 16
UH219669	7 / 30	UH313750	9 / 44	UH412631	2 / 4	UH440435	1 / 36-38	UH440863	11 / 41
UH223075	2 / 5	UH313882	12 / 23	UH412631	2 / 56	UH440439	3 / 25	UH440864	11 / 42
UH223075	1 / 37	UH314313	5 / 31	UH413006	10 / 6	UH440440	3 / 26	UH440865	12 / 14
UH228577	8 / 30	UH314313	8 / 36	UH414048	7 / 8	UH440447	3 / 22	UH440866	12 / 11
UH231499	8 / 32	UH322820	10 / 20	UH419010	11 / 23	UH440448	3 / 23	UH440867	11 / 1
UH255767	6 / 42	UH322821	10 / 21	UH440010	11 / 21	UH440460	2 / 7	UH440867	2 / 51
UH255767	6 / 15	UH334540	6 / 52	UH440017	3 / 36	UH440468	10 / 11	UH440869	12 / 12
UH256454	9 / 5	UH401019	2 / 30-39	UH440053	5 / 20	UH440487	10 / 19	UH440870	12 / 13
UH256571	1 / 17	UH401020	2 / 32	UH440056	12 / 22	UH440488	10 / 23	UH440871	11 / 39
UH256941	6 / 55	UH401021	2 / 31	UH440059	12 / 17	UH440493	10 / 22	UH440872	11 / 40
UH258923	9 / 11	UH401022	2 / 36	UH440061	12 / 26	UH440531	3 / 37	UH440873	11 / 19
UH282613	4 / 7	UH401023	2 / 30	UH440072	12 / 10	UH440535	2 /	UH440874	12 / 1
UH300562	6 / 20	UH401024	2 / 37	UH440074	5 / 10	UH440692	2 / 20a	UH440875	12 / 2
UH300666	6 / 72	UH401025	2 / 39	UH440075	5 / 11	UH440704	4 / 25	UH440876	11 / 43
UH300867	5 / 26	UH401026	2 / 33	UH440084	11 / 22	UH440705	4 / 28	UH440877	11 / 44
UH300868	3 / 11	UH401027	2 / 34	UH440093	12 / 31	UH440707	4 / 31	UH440878	12 / 30b
UH300874	12 / 3	UH401043	2 / 38	UH440093	11 / 53	UH440711	4 / 1a-54	UH440879	12 / 15
UH300874	11 / 33	UH401132	2 / 42-44	UH440136	7 / 15	UH440712	4 / 1b-54	UH440887	3 / 10
UH300877	12 / 32	UH401142	2 / 44	UH440180	4 / 4	UH440713	4 / 59	UH440888	3 / 14
UH300877	1 / 40	UH401152	2 / 43	UH440187	4 / 55	UH440715	4 / 52	UH440888	12 / 30a
UH300878	9 / 9	UH401162	2 / 42	UH440189	4 / 6	UH440719	4 / 1a	UH440983	13 / 1
UH300878	11 / 36a	UH410141	7 / 12	UH440210	3 / 1	UH440720	4 / 1b	UH440984	13 / 7
UH300878	5 / 13	UH410141	4 / 45	UH440212	3 / 9	UH440723	4 / 42	UH440985	13 / 8
UH300878	12 / 7	UH410334	8 / 22	UH440249	3 / 28	UH440726	4 / 47	UH440986	13 / 2
UH300883	11 / 36	UH410334	4 / 13	UH440280	2 / 20a-39	UH440729	3 / 1-35	UH440987	13 / 4
UH300884	5 / 25	UH410334	4 / 50	UH440281	2 / 20b-39	UH440731	3 / 2	UH440988	13 / 5
UH300885	5 / 14	UH410334	5 / 4	UH440285	3 / 4	UH440732	3 / 3	UH440989	13 / 6
UH300885	12 / 8	UH410493	1 / 21a	UH440285	2 / 50	UH440737	2 / 55-57	UH441018	2 / 55
UH300885	11 / 37a	UH410630	1 / 35	UH440288	3 / 5	UH440745	4 / 33	UH441040	11 / 55
UH300886	12 / 33	UH410635	11 / 30	UH440289	2 / 26-39	UH440746	4 / 34	UH441041	11 / 19b
UH300886	1 / 41	UH410635	11 / 25	UH440294	2 / 26	UH440747	4 / 37	UH441042	11 / 19a
UH300886	11 / 37	UH410714	11 / 27	UH440299	5 / 28	UH440764	4 / 40	UH441052	10 / 24
UH300887	12 / 4	UH410723	12 / 29	UH440309	5 / *	UH440765	4 / 44	UH441052	8 / 35
UH300887	9 / 8	UH410724	12 / 25	UH440323	8 / 19	UH440772	13 / 20	UH441060	10 / 16
UH300887	11 / 34	UH410741	11 / 18b	UH440344	8 / 16	UH440773	13 / 21	UH441065	10 / 14
UH300953	9 / 32	UH410742	11 / 3	UH440348	1 / 1-37	UH440774	13 / 22	UH441070	10 / 17
UH300957	5 / 22	UH410746	11 / 10	UH440350	1 / 1	UH440775	13 / 17	UH441071	10 / 1-7
UH300957	7 / 33	UH410746	11 / 52	UH440365	1 / 26	UH440776	13 / 9	UH441075	10 / 27
UH300957	11 / 16	UH410747	11 / 8	UH440366	1 / 22	UH440777	13 / 10	UH441077	10 / 26
UH300964	11 / 7	UH410748	11 / 9	UH440368	1 / 2	UH440778	13 / 11	UH441080	10 / 10
UH300966	7 / 31	UH410785	11 / 51	UH440369	1 / 28	UH440779	13 / 12	UH441082	10 / 3
UH300966	11 / 17	UH410797	11 / 21a	UH440373	1 / 31	UH440780	13 / 18	UH441085	10 / 12
UH300966	5 / 21	UH410842	6 / 12	UH440374	1 / 32	UH440781	13 / 13	UH441086	10 / 13
UH300971	7 / 32	UH410844	8 / 4	UH440376	1 / 34	UH440782	13 / 14	UH441101	2 / 9
UH300971	11 / 4	UH410883	6 / 4	UH440380	1 / 30-35	UH440783	13 / 15	UH441102	3 / 31
UH300971	4 / 20	UH410884	6 / 5	UH440382	3 / 12	UH440784	13 / 16	UH441105	11 / 45
UH300971	5 / 18	UH410958	5 / 30	UH440393	3 / 33	UH440789	1 / 50-52	UH441106	2 / 60

Numerical parts index/Numerisk deleregister

Part no. / Dele nr.	Fig./Ref. / Fig./Ref.	Part no. / Dele nr.	Fig./Ref. / Fig./Ref.	Part no. / Dele nr.	Fig./Ref. / Fig./Ref.	Part no. / Dele nr.	Fig./Ref. / Fig./Ref.	Part no. / Dele nr.	Fig./Ref. / Fig./Ref.
UH441116	4 / 56	UH443246	9 / 43	UH813506	2 / 52	UH850166	3 / 29	UH860158	9 / 6
UH441122	10 / 15	UH443247	9 / 40	UH813506	11 / 2	UH852156	11 / 35	UH860158	9 / 30
UH441125	4 / 65	UH443248	9 / 41	UH813520	9 / 23	UH852156	12 / 5	UH860158	2 / 52
UH441142	11 / 29	UH443260	9 / 20-36	UH813520	1 / 23	UH852156	9 / 30	UH860158	6 / 51
UH441177	5 / 7a	UH443265	9 / 34	UH813520	4 / 41	UH852156	2 / 61	UH860158	12 / 21
UH441183	11 / 14a	UH443270	9 / 28	UH813520	1 / 18	UH852156	9 / 36	UH860158	11 / 2
UH441201	2 / 1	UH443275	9 / 20	UH813520	2 / 8	UH852158	3 / 32	UH860158	11 / 15
UH441206	5 / 1	UH443280	9 / 31	UH813525	7 / 36	UH852158	1 / 42	UH860158	7 / 39
UH441217	7 / 11	UH443289	9 / 35	UH813530	6 / 13	UH852158	2 / 52	UH860160	8 / 5
UH441218	4 / 6a	UH450312	9 / 22	UH813535	6 / 21	UH852158	9 / 4	UH860160	8 / 9
UH441226	11 / 11a	UH450415	9 / 33	UH813535	11 / 20	UH852158	12 / 9	UH860160	6 / 21
UH441227	11 / 12a	UH450416	9 / 24	UH813535	4 / 38	UH852158	6 / 51	UH860160	8 / 8
UH441235	1 / 46	UH450572	7 / 20	UH813535	6 / 73	UH852158	12 / 34	UH860160	6 / 74
UH441237	3 / 41	UH450585	7 / 24	UH813540	4 / 39	UH852158	11 / 2	UH860160	2 / 8
UH441238	3 / 40	UH450968	9 / 26	UH813540	7 / 4	UH852158	6 / 54	UH860160	11 / 20
UH441239	5 / 35	UH450985	9 / 21	UH813540	8 / 5	UH852158	11 / 15	UH860160	1 / 23
UH441252	10 / 2	UH450988	9 / 29	UH813560	8 / 9	UH852158	9 / 12	UH860160	4 / 38
UH441254	10 / 5	UH451101	7 / 10	UH813625	4 / 16	UH852158	9 / 10	UH860160	9 / 23
UH441256	10 / 4	UH453320	7 / 2	UH813630	3 / 24	UH852160	8 / 9	UH860163	4 / 23
UH441400	8 / 2-9	UH453335	7 / 25	UH813630	4 / 60	UH852160	7 / 4	UH860163	6 / 45
UH441406	8 / 2	UH453338	7 / 21	UH813631	4 / 5	UH852160	6 / 21	UH860163	6 / 33
UH441411	8 / 7	UH453345	7 / 38	UH813635	9 / 2	UH852160	8 / 5	UH860163	4 / 21
UH441412	8 / 6	UH453367	7 / 35	UH813635	9 / 16	UH852160	7 / 36	UH860163	7 / 14
UH441415	8 / 23	UH453371	7 / 37	UH813635	7 / 27	UH852160	4 / 39	UH860163	2 / 3
UH441441	8 / 15	UH453375	7 /	UH813635	4 / 36	UH852162	2 / 3	UH860163	4 / 60
UH441442	8 / 17	UH453387	7 / 7	UH813640	4 / 54	UH852162	6 / 38	UH860163	9 / 2
UH441443	8 / 18	UH453395	7 / 26	UH813640	2 / 3	UH852162	4 / 54	UH860163	9 / 27
UH441651	8 / 1	UH453398	5 / 16	UH813645	4 / 21	UH852162	6 / 46	UH860163	3 / 24
UH442588	8 / 3	UH453399	5 / 12b	UH813645	4 / 23	UH852162	7 / 14	UH860163	9 / 16
UH442952	6 / 35	UH810550	6 / 14	UH813650	7 / 14	UH852162	9 / 27	UH860166	4 / 8
UH442954	6 / 23	UH810604	8 / 8	UH813680	9 / 27	UH852162	9 / 2	UH860166	6 / 43
UH442954	6 / 37	UH813314	1 / 13	UH813830	3 / 38	UH852162	8 / 30	UH860166	1 / 27
UH442958	8 / 25	UH813335	11 / 35	UH813840	3 / 27	UH852162	4 / 23	UH860166	6 / 75
UH442959	6 / 50	UH813335	12 / 6	UH813840	1 / 27	UH852162	9 / 16	UH860166	4 / 49
UH442966	6 / 2	UH813335	3 / 13	UH813850	4 / 9	UH852162	4 / 21	UH860166	3 / 27
UH442972	6 / 22	UH813340	5 / 27	UH813860	5 / 2a	UH852162	3 / 24	UH860166	2 / 24
UH442972	6 / 36	UH813360	5 / 15	UH813870	5 / 2b	UH852162	7 / 27	UH860166	3 / 38
UH442973	6 / 57	UH813375	12 / 5	UH813870	5 / 29	UH852166	2 / 24	UH860166	5 / 2
UH442976	6 / 9	UH813375	11 / 35	UH813870	3 / 6	UH852166	1 / 27	UH860170	9 / 25
UH442977	8 / 26	UH813416	12 / 21	UH813870	4 / 12	UH852166	5 / 4	UH860170	9 / 33
UH442978	8 / 27	UH813416	8 / 28	UH813890	4 / 8	UH852166	5 / 2	UH860175	1 / 5
UH442980	6 / 10b	UH813420	7 / 39	UH813900	2 / 22	UH852166	5 / 29	UH860175	11 / 28
UH442981	6 / 11b	UH813420	7 / 13	UH813902	5 / 4	UH852166	4 / 13	UH860208	5 / 2
UH442982	6 / 34	UH813420	4 / 46	UH813903	4 / 49	UH852166	4 / 8	UH862138	7 / 39
UH442984	6 / 30-47	UH813420	3 / 32	UH821316	9 / 30	UH852166	3 / 27	UH865325	6 / 40
UH442985	6 / 30	UH813425	6 / 51	UH821325	2 / 61	UH852166	8 / 21	UH865563	11 / 24
UH442989	6 / 31	UH813430	9 / 4	UH821325	9 / 36	UH852166	4 / 9	UH866430	3 / 7
UH442990	6 / 3	UH813430	8 / 20	UH821416	2 / 10	UH852166	4 / 49	UH866645	1 / 29
UH442991	6 / 2b-15	UH813435	12 / 9	UH821470	9 / 6	UH852167	7 / 23	UH866645	1 / 6
UH443040	6 / 71	UH813435	11 / 38	UH825650	7 / 16	UH855378	6 / 58	UH866660	1 / 33
UH443042	6 / 77	UH813440	6 / 53	UH831716	6 / 32	UH855380	11 / 46	UH866660	1 / 3
UH443046	6 / 70	UH813445	12 / 34	UH839260	7 / 22	UH860156	9 / 36	UH867056	1 / 52
UH443050	6 / 1	UH813445	1 / 43	UH850158	3 / 32	UH860156	2 / 61	UH867056	6 / 41
UH443230	9 / 1-12	UH813450	9 / 10	UH850158	6 / 59	UH860156	1 / 13	UH867061	2 / 6
UH443231	9 / 1	UH813460	6 / 54	UH850158	9 / 6	UH860158	2 / 10	UH867061	2 / 16
UH443232	9 / 3	UH813460	9 / 12	UH850158	6 / 53	UH860158	6 / 53	UH867061	1 / 20
UH443236	9 / 15	UH813470	12 / 34	UH850158	6 / 56	UH860158	9 / 12	UH867061	1 / 38
UH443237	9 / 15-16	UH813470	1 / 42	UH850160	11 / 20	UH860158	9 / 4	UH867061	1 / 14
UH443245	9 / 42	UH813490	11 / 15	UH850160	11 / 46	UH860158	9 / 10	UH868420	9 / 25

Numerical parts index/Numerisk deleregister

Part no. / Dele nr.	Fig./Ref. / Fig./Ref.	Part no. / Dele nr.	Fig./Ref. / Fig./Ref.	Part no. / Dele nr.	Fig./Ref. / Fig./Ref.	Part no. / Dele nr.	Fig./Ref. / Fig./Ref.	Part no. / Dele nr.	Fig./Ref. / Fig./Ref.

UH868420	9 / 33
UH868447	6 / 8
UH868455	4 / 26
UH868470	7 / 5
UH868495	4 / 43
UH868540	6 / 7
UH868595	4 / 30
UH868603	6 / 44
UH868610	1 / 30
UH868614	7 / 3
UH868719	11 / 26
UH868719	11 / 31
UH870146	4 / 53
UH870147	4 / 21
UH870163	4 / 3
UH870647	4 / 27
UH870662	4 / 29
UH870672	7 / 6
UH870718	6 / 6
UH870728	4 / 32
UH870757	4 / 24
UH873540	1 / 16
UH873540	2 / 35
UH873540	1 / 29a
UH873540	3 / 30
UH873540	11 / 32
UH873540	4 / 61
UH873541	3 / 8
UH873545	1 / 21
UH900501	7 / *
UH900507	4 / 17a
UH900508	4 / 17b
UH900508	7 / 9
UH901802	4 / 58
UH901847	4 / 57
UH911266	5 / 23
UH911266	6 / 25
UH911270	1 / 51
UH931825	6 / 39

10PARTS.NL